Alle Rechte vorbehalten/ *All rights reserved*

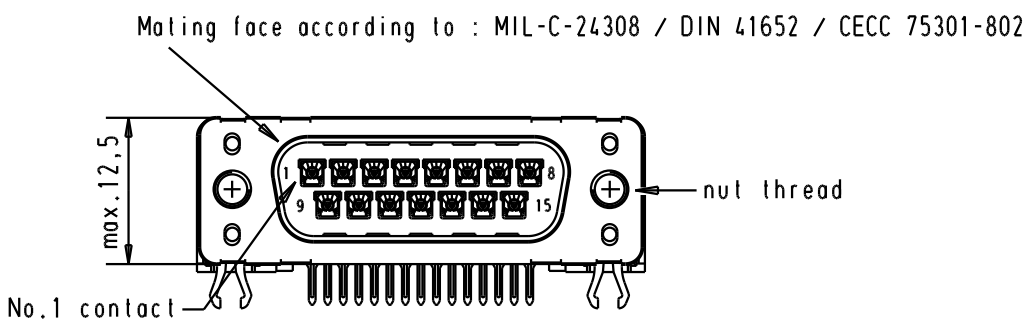

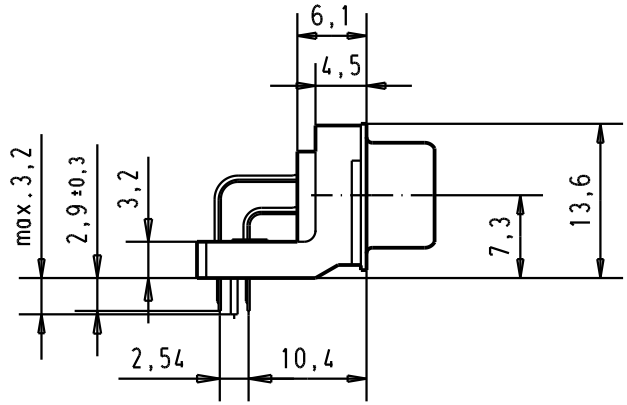

Printed board layout
component side

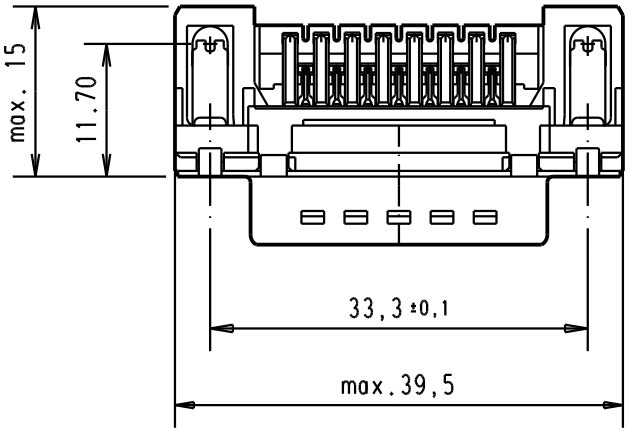

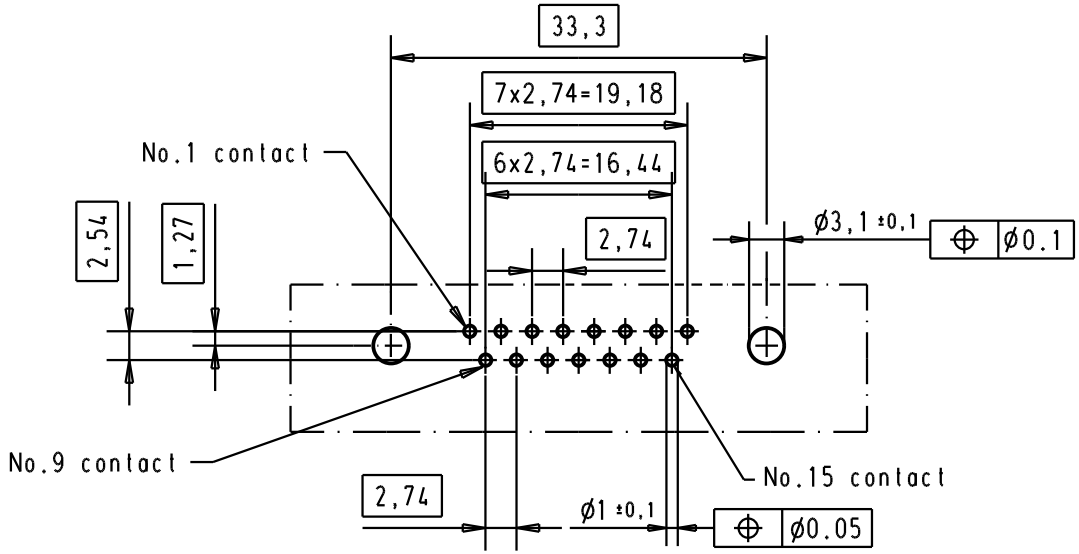

Connector retention and insertion forces on the PCB = 25 / 80 newtons

Part number	Nut thread	Performance level	Mod.	Dat.	Name
09 65 266 3811	M3	1			
09 65 266 6811	M3	2			
09 65 266 7811	M3	3			
09 65 266 3812	4-40 UNC	1			
09 65 266 6812	4-40 UNC	2	31892	22/04/04	JH
09 65 266 7812	4-40 UNC	3	29723	05/03/02	CV

	Dat.	Name
Detail.	05/03/02	CV
Insp.		
Stand.		

All Dim. in mm
Orig. Size DIN A 4

D-Sub, high temperature, male, standard,15 poles, with solder pins 2.9, nuts and grounding board lock

Maßstab/ *Scale* 1.5:1

HARTING EURL
F-95972 Paris

TB 0965266x81x

Sub.

Blatt/ *Page* 2