INTERFACE FOR MODULE T2 (32 WAY)

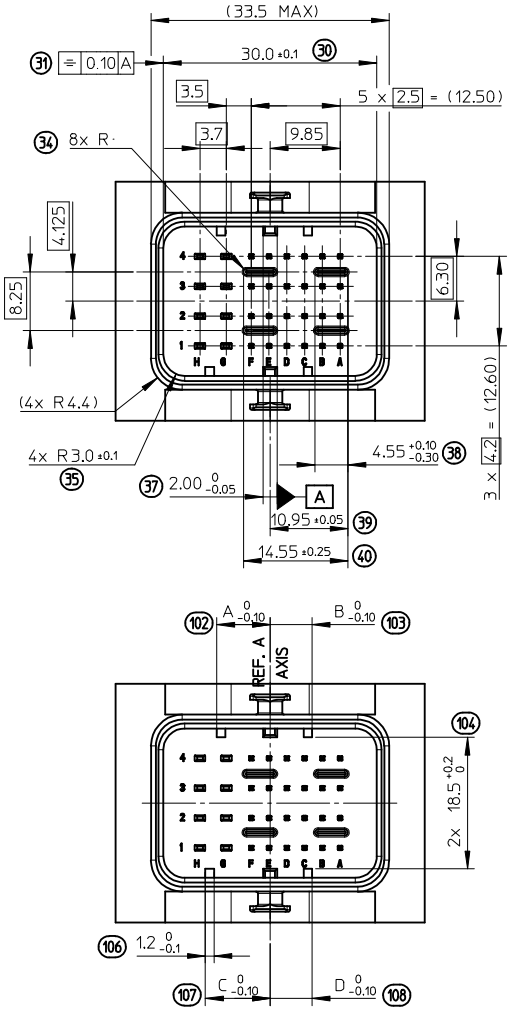

INTERFACE FOR MODULE T3 (48 WAY)

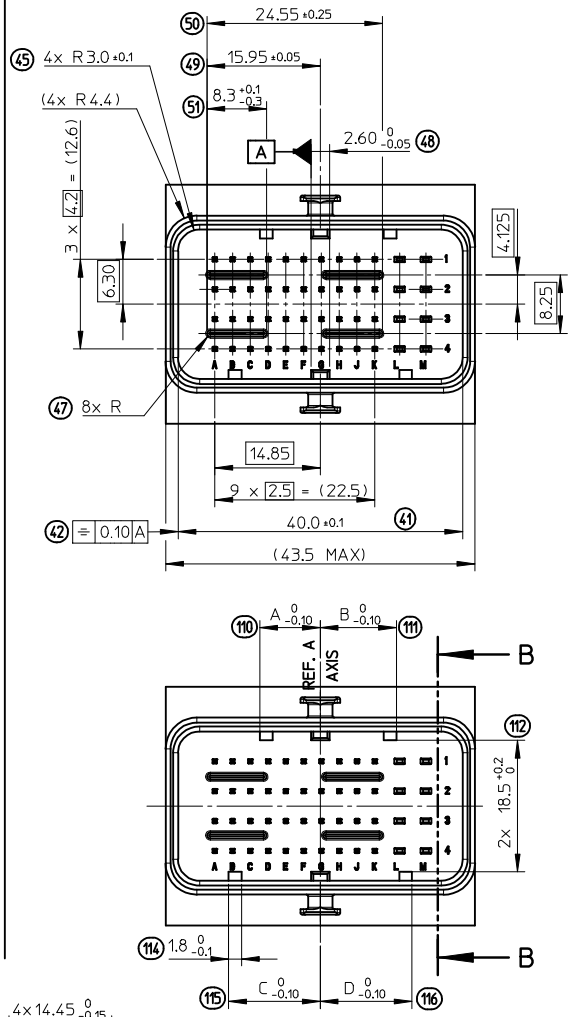

INTERFACES FOR HYBRID MODULES T2 (32 WAY) AND T3 (48 WAY)

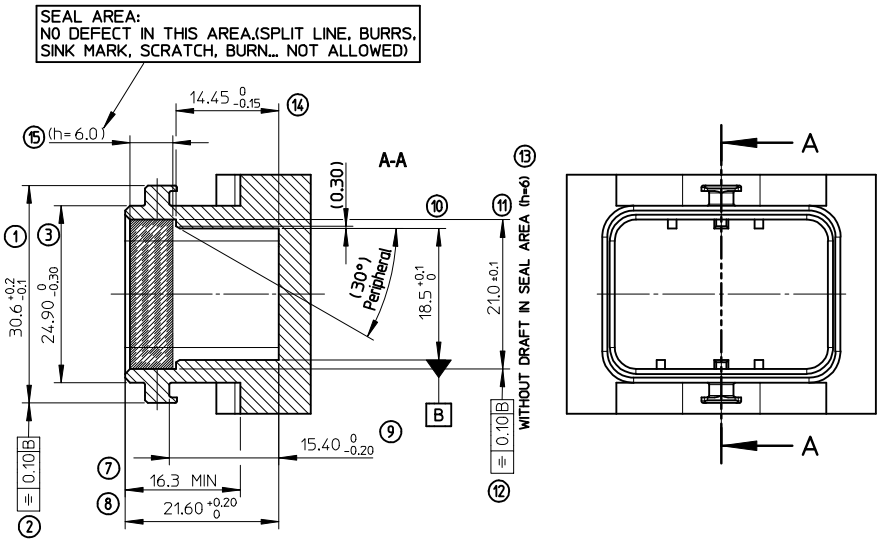

HEADERS CODINGS

(CODING 2 SHOWN)

HEADER'S CODINGS FOR MODULE T2 (32W)					
COLOR	CODING	DIM. A	DIM. B	DIM. C	DIM. D
BLACK	1	9.1	4.3	5.9	4.3
GREY	2	7.5	5.9	9.1	5.9
BROWN	3	5.9	7.5	9.1	9.1
GREEN	4	7.5	9.1	4.3	4.3
BLUE	5	4.3	7.5	5.9	5.9
YELLOW	6	9.1	7.5	4.3	7.5

(CODING 3 SHOWN)

HEADER'S CODINGS FOR MODULE T3 (48W)					
COLOR	CODING	DIM. A	DIM. B	DIM. C	DIM. D
BLACK	1	12.9	6.3	8.5	6.3
GREY	2	10.7	8.5	12.9	8.5
BROWN	3	8.5	10.7	12.9	12.9
GREEN	4	10.7	12.9	6.3	6.3
BLUE	5	6.3	10.7	8.5	8.5
YELLOW	6	12.9	10.7	6.3	10.7

NOTE:

1- INTERFACE DEFINITION BASED ON NFR13-462 STANDARD.
2- HEADER: ELASTICITY MODULUS: 8000Mpa min.
(INITIAL CONDITION BEFORE AGEING)

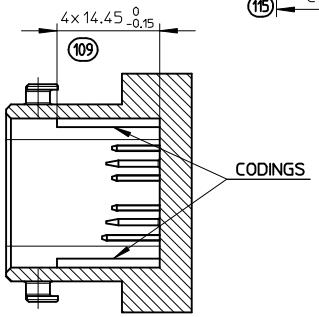

B-B

ENTER DESCRIPTION
EC NO: G2010-0220
DRWN:PDECHELE 2010/05/20
CHKD:J.GIURIATO 2008/10/03
APPR:CBOUCHAN 2010/06/29
REV B
DESCRIPTION
QUALITY SYMBOLS

GENERAL TOLERANCES (UNLESS SPECIFIED)	mm	INCH
4 PLACES	± ---	± ---
3 PLACES	± ---	± ---
2 PLACES	± 0.10	± ---
1 PLACE	± 0.10	± ---
ANGULAR ± 2 °		

DRAFT WHERE APPLICABLE MUST REMAIN WITHIN DIMENSIONS

DIMENSION STYLE: MM ONLY
SCALE: 2:1
DESIGN UNITS: METRIC
FIRST ANGLE PROJECTION

DRAWN BY: G.DESBRUERES DATE: 2008/10/02
CHECKED BY: J.GIURIATO DATE: 2008/10/03
APPROVED BY: O.PLESSIS DATE: 2008/10/06
MATERIAL NO.: N/A

TITLE: INTERFACES FOR CONNECTOR 32 & 48 CKT CMC GENERIC SALES DRAWING

molex MOLEX INCORPORATED

DOCUMENT NO.: SD-98644-006
SHEET NO.: 1 OF 3
SIZE: A2

THIS DRAWING CONTAINS INFORMATION THAT IS PROPRIETARY TO MOLEX INCORPORATED AND SHOULD NOT BE USED WITHOUT WRITTEN PERMISSION

tb_frame_A2_P_AM_F
Rev. F 2009/06/18

PINS 0.635 DEFINITION

5:1

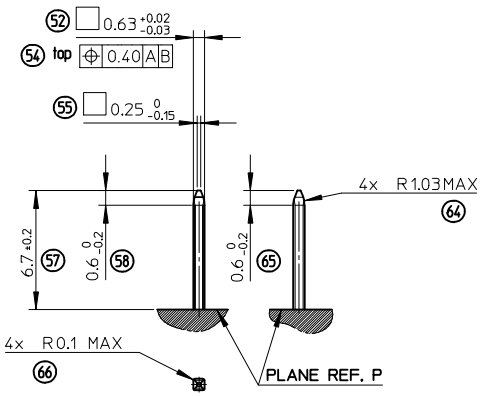

TABS 1.5 DEFINITION

5:1

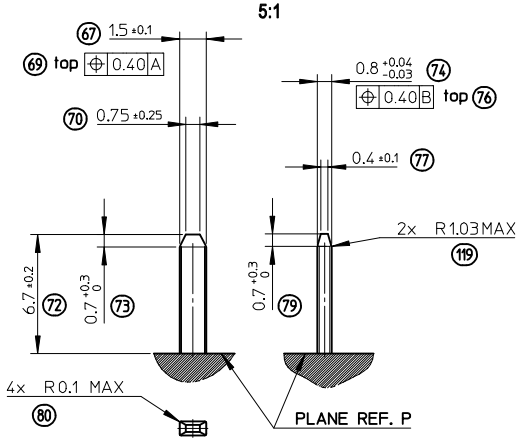

GROUND TABS 1.5 DEFINITION

5:1

FOR OTHER DIMENSIONS
SEE TABS 1.5 DEFINITION

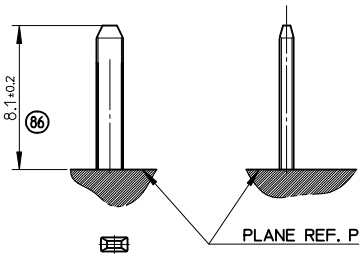

PROTECTION WALL DEFINITION

5:1

1 :SHAPES ALLOWED

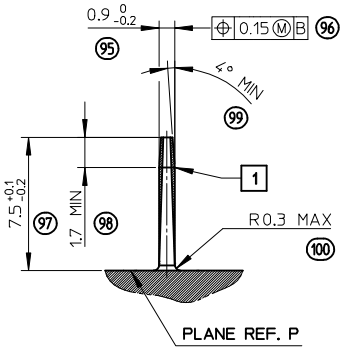

LOCKING AXIS PROTECTION

2:1

MANDATORY OVERTHICKNESS: dimension noted (*)
IF THE LOCKING AXIS ARE OUT OF
EQUIPMENT OVERALL DIMENSIONS.

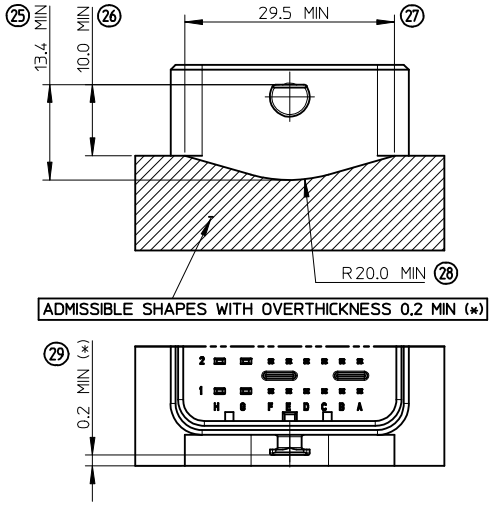

LOCKING AXIS DEFINITION

5:1

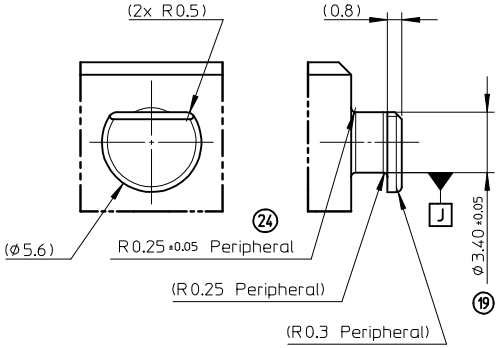

ENTER DESCRIPTION EC NO: G2010-0220 DRWN:PDECHELE 2010/05/20 CH'KD:J.GIURIATO 2008/10/03 APPR:CBOUCHAN 2010/06/29 DESCRIPTION REV B	QUALITY SYMBOLS	GENERAL TOLERANCES (UNLESS SPECIFIED) mm / INCH 4 PLACES ± --- / ± --- 3 PLACES ± --- / ± --- 2 PLACES ± 0.10 / ± --- 1 PLACE ± 0.10 / ± --- ANGULAR ± 2 ° DRAFT WHERE APPLICABLE MUST REMAIN WITHIN DIMENSIONS	DIMENSION STYLE MM ONLY DRAWN BY G.DESBRUERES DATE 2008/10/02 CHECKED BY J.GIURIATO DATE 2008/10/03 APPROVED BY O.PLESSIS DATE 2008/10/06 MATERIAL NO. N/A	SCALE 1:1 DESIGN UNITS METRIC FIRST ANGLE PROJECTION TITLE INTERFACES FOR CONNECTOR 32 & 48 CKT CMC GENERIC SALES DRAWING molex MOLEX INCORPORATED DOCUMENT NO. SD-98644-006 SHEET NO. 2 OF 3		
				SIZE A2	THIS DRAWING CONTAINS INFORMATION THAT IS PROPRIETARY TO MOLEX INCORPORATED AND SHOULD NOT BE USED WITHOUT WRITTEN PERMISSION		

tb_frame_A2_P_AM_F
Rev. F 2009/06/18

CONNECTOR ON HEADER - OVERALL DIMENSIONS

MULTI-HEADERS LAYOUT

LAYOUT FOR TWO INTERFACES T2 (32W)

FOR SAME HARNESS EXIT CONFIGURATION

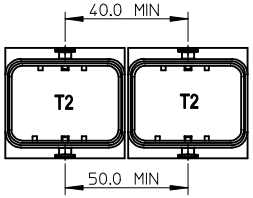

FOR OPPOSITE HARNESS EXIT CONFIGURATION

LAYOUT FOR TWO INTERFACES T2 (32W) AND T3 (48W)

FOR SAME HARNESS EXIT CONFIGURATION

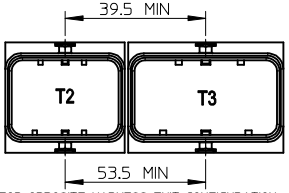

FOR OPPOSITE HARNESS EXIT CONFIGURATION

LAYOUT FOR TWO INTERFACES T3 (48W)

FOR SAME HARNESS EXIT CONFIGURATION

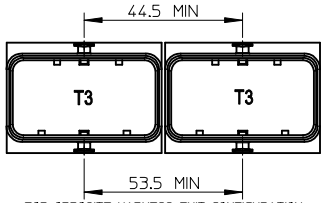

FOR OPPOSITE HARNESS EXIT CONFIGURATION

UNLOCKED CONNECTOR - OVERALL DIMENSIONS

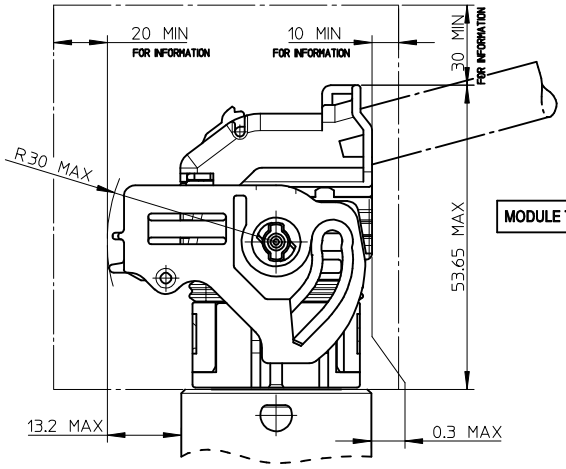

MODULE T2 (32W)

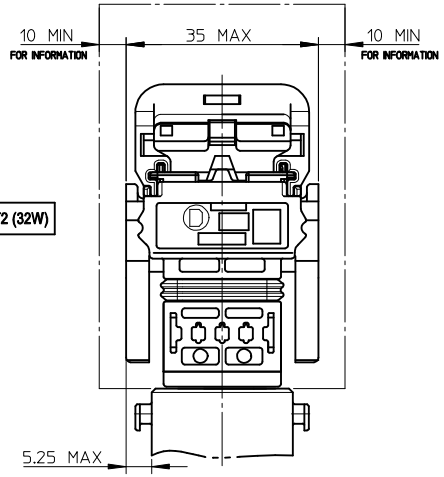

LOCKED CONNECTOR - OVERALL DIMENSIONS

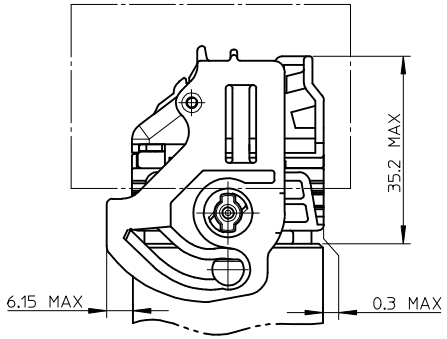

UNLOCKED CONNECTOR - OVERALL DIMENSIONS

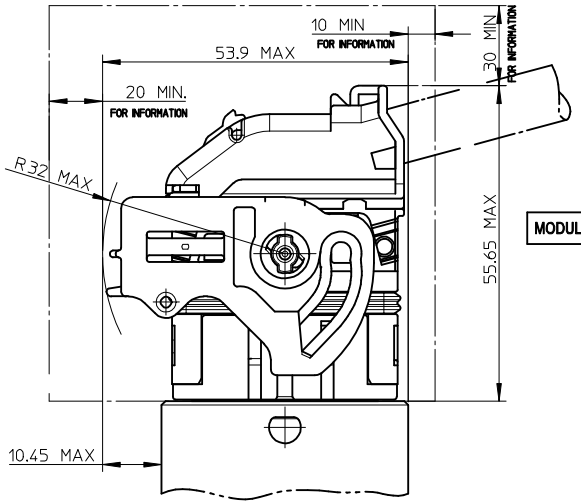

MODULE T3 (48W)

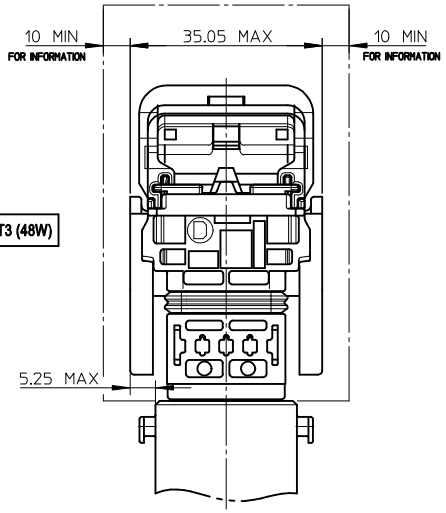

LOCKED CONNECTOR - OVERALL DIMENSIONS

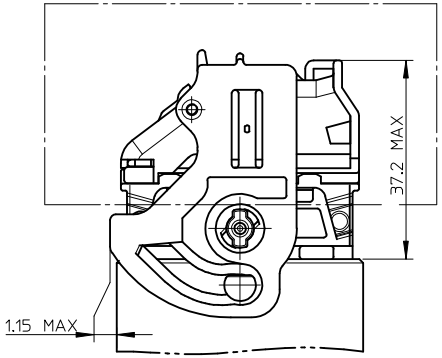

NOTE:

1- T2 = 32 WAY / T3 = 48 WAY

LEGEND:

FREE VOLUME FOR MANUAL LOCKING AND UNLOCKING DIMENSIONS GIVEN FOR INFORMATION ONLY TO BE CONFIRMED BASED UPON VEHICLE CONFIGURATION.

ENTER DESCRIPTION			
EC NO: G2010-0220			
DRWN:PDECHELE	2010/05/20		
CHKD:J.GIURIATO	2008/10/03		
APPR:CBOUCHAN	2010/06/29		
REV	DESCRIPTION		
B			

QUALITY SYMBOLS

GENERAL TOLERANCES (UNLESS SPECIFIED)

	mm	INCH
4 PLACES	± ---	± ---
3 PLACES	± ---	± ---
2 PLACES	± 0.10	± ---
1 PLACE	± 0.10	± ---
ANGULAR ± 2 °		

DRAFT WHERE APPLICABLE MUST REMAIN WITHIN DIMENSIONS

DIMENSION STYLE: MM ONLY	SCALE: 1:1	DESIGN UNITS: METRIC	FIRST ANGLE PROJECTION
DRAWN BY: G.DESBRUERES	DATE: 2008/10/02	TITLE: INTERFACES FOR CONNECTOR 32 & 48 CKT CMC GENERIC SALES DRAWING	
CHECKED BY: J.GIURIATO	DATE: 2008/10/03		
APPROVED BY: O.PLESSIS	DATE: 2008/10/06	molex MOLEX INCORPORATED	
MATERIAL NO.: N/A		DOCUMENT NO.: SD-98644-006	SHEET NO.: 3 OF 3
SIZE: A2			

THIS DRAWING CONTAINS INFORMATION THAT IS PROPRIETARY TO MOLEX INCORPORATED AND SHOULD NOT BE USED WITHOUT WRITTEN PERMISSION

INDICATION DIMENSIONS S.P.C DENOTES S.P.C DIMENSIONS	
INDICATION DIMENSIONS CRITIQUES DENOTES CRITICAL DIMENSIONS	
INDICATION DIMENSIONS FONCTIONNELLES DENOTES FUNCTIONAL DIMENSIONS	
QUANTITE PAR FEUILLE INDIVIDUELLE QUANTITY PER INDIVIDUAL SHEET	
- 0	- 0 - 3

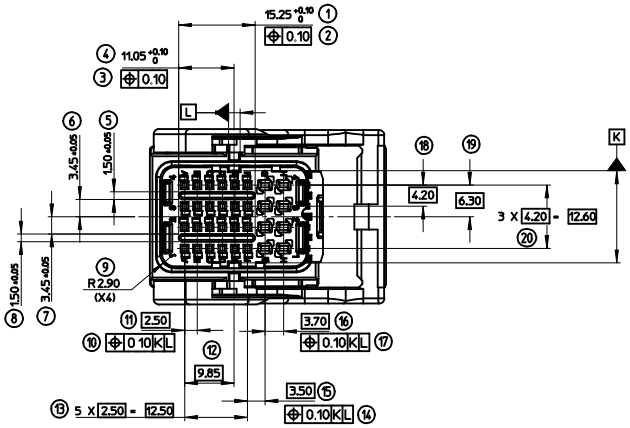

PORTE-CLIPS 32 VOIES SORTIE DROITE FEMALE MODULE 32 WAY RIGHT WIRE OUTPUT	
REF. MOLEX / MOLEX P/N	COULEUR/COLOUR
0989442001	NOIR/BLACK
0989442002	GRIS/GREY
0989442003	MARRON/BROWN
0989442004	VERT/GREEN
0989442005	BLEU/BLUE
PORTE-CLIPS 32 VOIES SORTIE GAUCHE FEMALE MODULE 32 WAY LEFT WIRE OUTPUT	
REF. MOLEX / MOLEX P/N	COULEUR/COLOUR
0989443001	NOIR/BLACK
0989443002	GRIS/GREY
0989443003	MARRON/BROWN
0989443004	VERT/GREEN
0989443005	BLEU/BLUE

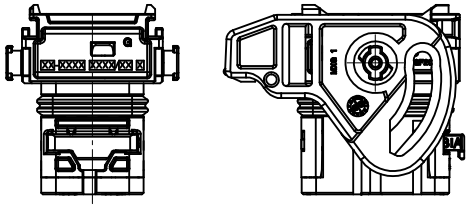

(LEVIER NON REPRESENTE)
(LEVER NOT SHOWN)

LETTRE G VISIBLE, SORTIE GAUCHE
LETTER G VISIBLE, LEFT WIRE OUTPUT

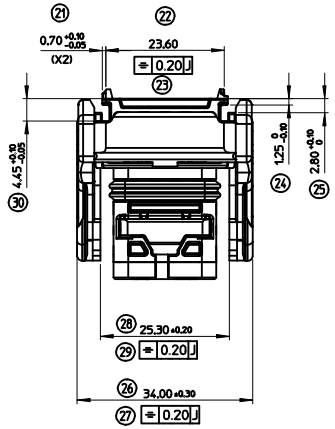

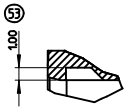

SECTION N
(Ech. 5:1)

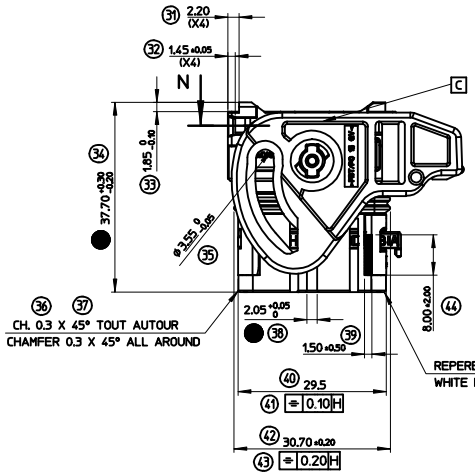

REFERENCE MOLEX
MOLEX PART NUMBER

QUANTIEME/ANNEE DE L'ASSEMBLAGE
DAY IN YEAR/YEAR OF ASSEMBLY

INDICE DE REVISION DU PLAN CLIENT
CUSTOMER DRAWING REVISION LEVEL

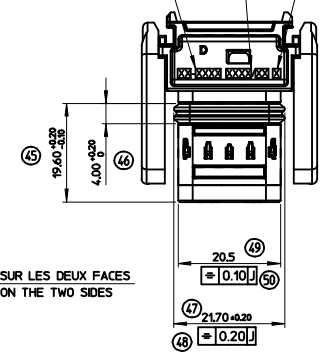

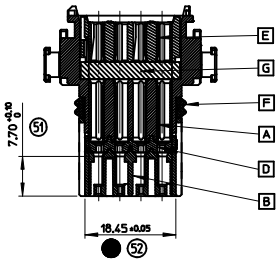

SECTION A-A

(LEVIER NON REPRESENTE)
(LEVER NOT SHOWN)

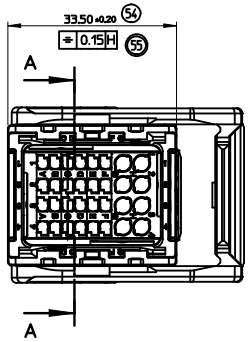

NOTES:

1- LE PORTE-CLIPS ASSEMBLE REPRESENTE EST LA VERSION SORTIE DROITE CODAGE 1
FOR ILLUSTRATION PURPOSE THE FEMALE MODULE SHOWN IS THE RIGHT WIRE OUTPUT VERSION CODING 1

2- IMPLANTATION DES CLIPS, ENCOMBREMENTS, DETROMPAGE SUIVANT INTERFACE CONNECTIQUE PSA STE 9629500099 ET RENAULT 7710 001 079
CLIPS LAYOUT, CODING FOLLOWING PSA INTERFACE CONNECTIQUE STE 9629500099 AND RENAULT 7710 001 079

3- REFERENCE DES CONNEXIONS SUIVANT STE 9637276380 ET STE 9628421380
TERMINAL PART NUMBER FOLLOWING STE 9637276380 AND STE 9628421380

4- PRODUIT CONFORME A LA SPECIFICATION PSA STE 9629568099
PRODUCT IN ACCORDANCE WITH PSA SPECIFICATION STE 9629568099

5- CAHIER DE PRECONISATION : RAS-98644-005
APPLICATION SPECIFICATION : RAS-98644-005

6- LE PORTE-CLIPS EQUIPE S'ASSEMBLE AVEC LE CAPOT REFERENCE : 0986491003
THE ASSEMBLED FEMALE MODULE IS ASSEMBLED WITH THE COVER PART NUMBER : 0986491003

7- POIDS PIECE: 30,275 g
PART WEIGHT: 30,275 g

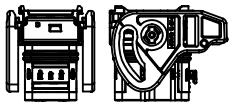

ECHELLE 1:1
SCALE 1:1

REF. MOLEX MOLEX PART NUMBER	REP.	DESIGNATION	MATIERE/MATERIAL	COULEUR/COLOUR
0986570001	G	JOINT GEL GROMMET GEL GROMMET SEAL	SILICONE	BLEU/BLUE
0986560001	F	JOINT INTERFACIAL PERIMETER SEAL	SILICONE	BLEU/BLUE
0986481001	E	GRILLE DE COMPRESSION REAR SEAL COVER	PBTP 20% G.F.	BLEU/BLUE
0986471001	D	DOUBLE VERROUILLAGE SECONDARY LOCKING	PBTP 30% G.F.	VERT/GREEN
0986461001	C	LEVIER/LEVER	PBT/PC 15% G.F.	GRIS/GREY
0986451005	B	BOITIER INFERIEUR BOTTOM HOUSING	PBTP 20% G.F.	BLEU/BLUE
0986451004				VERT/GREEN
0986451003				MARRON/BROWN
0986451002				GRIS/GREY
0986451001				NOIR/BLACK
0986441001	A	BOITIER SUPERIEUR TOP HOUSING	PBTP 20% G.F.	NOIR/BLACK

SHT	REV
2	C2
1	C2

EC NO: G2009-0313
DRWN:PGRANDCL2009/06/18
CHKD:PDECHELE2009/06/18
APPR: CBOUCHAN2009/06/18
DESCRIPTION
REV C2

GENERAL TOLERANCES (UNLESS SPECIFIED)

	mm	INCH
4 PLACES	± ---	± ---
3 PLACES	± ---	± ---
2 PLACES	± 0.10	± ---
1 PLACE	± 0.15	± ---
ANGULAR ± 1 °		

DRAFT WHERE APPLICABLE
MUST REMAIN
WITHIN DIMENSIONS

SCALE 2:1
DESIGN UNITS METRIC
FIRST ANGLE PROJECTION
REVISE ON CAD ONLY
DIMENSION STYLE MM ONLY
DRAWN BY PGR DATE 99/12/12
CHECKED BY PDE DATE 00/02/02
APPROVED BY CBO DATE 00/02/02

TITLE
PORTE-CLIPS 32 VOIES CMC
FEMALE MODULE CMC 32 WAY
SALES DRAWING

molex MOLEX INCORPORATED

MATERIAL NO. SEE CHART
DOCUMENT NO. SD-98944-010
SHEET NO. 1 OF 2

THIS DRAWING CONTAINS INFORMATION THAT IS PROPRIETARY TO MOLEX INCORPORATED AND SHOULD NOT BE USED WITHOUT WRITTEN PERMISSION

A1

tb_frame_A1_P_AM
rev. B1 2000/08/01

ENCOMBREMENT PORTE-CLIPS D.V. POSITION MONTAGE CLIP
FEMALE MODULE LAYOUT SECONDARY LOCKING POSITION FOR CLIP ASSEMBLY

ENCOMBREMENT PORTE-CLIPS D.V. POSITION LIVRAISON
FEMALE MODULE LAYOUT SECONDARY LOCKING IN DELIVERY POSITION

PORTE-CLIPS SORTIE DROITE
FEMALE MODULE RIGHT WIRE OUTPUT

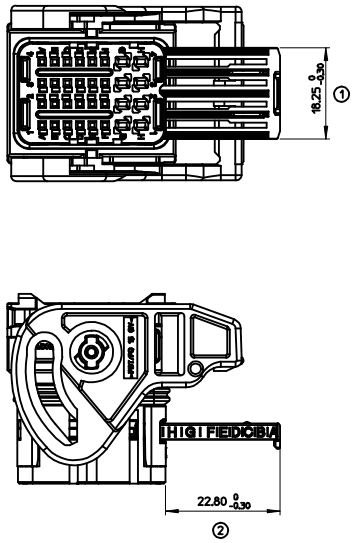

PORTE-CLIPS SORTIE GAUCHE
FEMALE MODULE LEFT WIRE OUTPUT

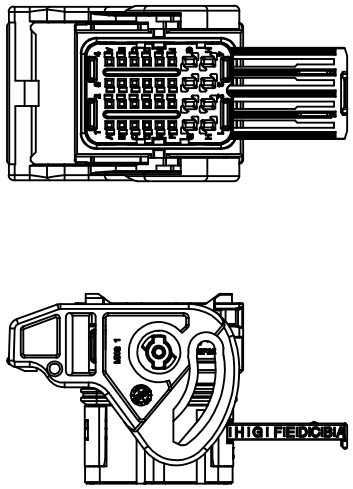

PORTE-CLIPS SORTIE DROITE
FEMALE MODULE RIGHT WIRE OUTPUT

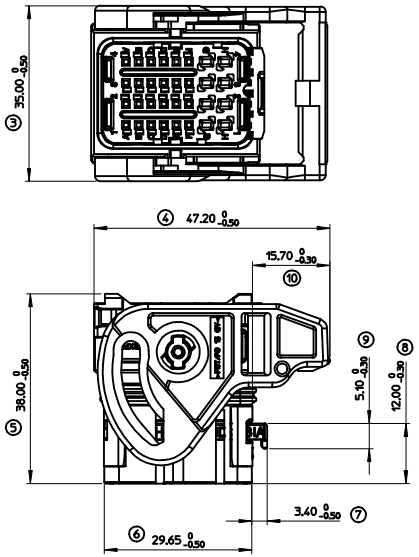

PORTE-CLIPS SORTIE GAUCHE
FEMALE MODULE LEFT WIRE OUTPUT

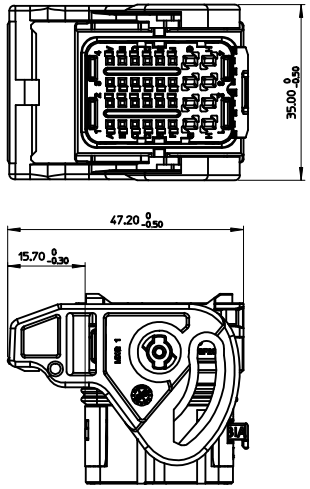

POSITION DES DETROMPAGES
CODING POSITION

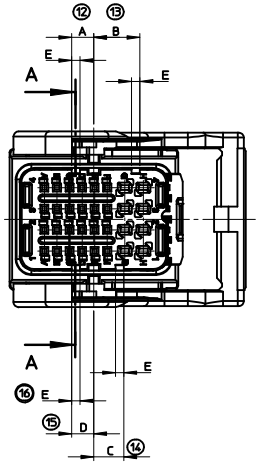

COULEUR/COLOUR	DETROMPAGE/CODING	$A^{+0.10}_{0}$	$B^{+0.10}_{0}$	$C^{+0.10}_{0}$	$D^{+0.10}_{0}$	$E^{+0.10}_{0}$
NOIR/BLACK	1	4.40	9.15	5.95	4.40	1.65
GRIS/GREY	2	5.95	7.60	9.15	5.95	1.65
MARRON/BROWN	3	7.60	5.95	9.15	9.15	1.65
VERT/GREEN	4	9.15	7.60	4.40	4.40	1.65
BLEU/BLUE	5	7.60	4.40	5.95	5.95	1.65

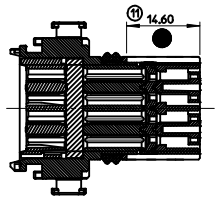

SECTION A-A
(LEVIER NON REPRESENTE)
(LEVER NOT SHOWN)

INDICATION DIMENSIONS S.P.C
DENOTES S.P.C DIMENSIONS
INDICATION DIMENSIONS CRITIQUES
DENOTES CRITICAL DIMENSIONS
INDICATION DIMENSIONS FONCTIONNELLES
DENOTES FUNCTIONAL DIMENSIONS

QUANTITE PAR FEUILLE INDIVIDUELLE
QUANTITY PER INDIVIDUAL SHEET
0 0 1

ENCOMBREMENT HORS-TOUT
OVERALL DIMENSION

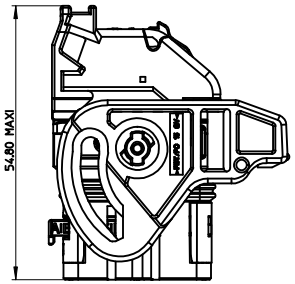

CONTACTS
FEMALE TERMINAL

REPERE ALVEOLES CAVITIES NUMBER	CONTACTS FEMALE TERMINAL	REF. MOLEX MOLEX P/N	DIAMETRE ISOLANT FIL MINI / MAXI MIN / MAX WIRE INSULATION DIAMETER
A1 à F1 A2 à F2 A3 à F3 A4 à F4	CLIP 0.63 (0.35mm2 à 0.60mm2)	0986581211 0986581213	ø1.25 min / ø1.90 max
	CLIP 0.63 (0.75mm2)	0986581212	ø1.60 min / ø1.90 max
G1 à G4 H1 à H4	CLIP 1.5 (0.5mm2 à 1mm2)	0989151029	ø1.40 min / ø2.15 max
	CLIP 1.5 (> 1mm2 à 2mm2)	0989151039	ø2.25 min / ø2.65 max

EC NO: G2009-0313
DRWN:PGRANDCL2009/06/18
CHKD:PDECHELE2009/06/18
APPR: CBOUCHAN2009/06/18
DESCRIPTION
REV
C2

GENERAL TOLERANCES (UNLESS SPECIFIED)

	mm	INCH
4 PLACES	± ---	± ---
3 PLACES	± ---	± ---
2 PLACES	± 0.10	± ---
1 PLACE	± 0.15	± ---

ANGULAR ± 1 °

DRAFT WHERE APPLICABLE
MUST REMAIN
WITHIN DIMENSIONS

SCALE 2:1
DESIGN UNITS METRIC
FIRST ANGLE PROJECTION
REVISE ON CAD ONLY
DIMENSION STYLE MM ONLY
DRAWN BY PGR DATE 99/12/12
CHECKED BY PDE DATE 00/02/02
APPROVED BY CBO DATE 00/02/02

TITLE
PORTE-CLIPS 32 VOIES CMC
FEMALE MODULE CMC 32 WAY
SALES DRAWING

molex MOLEX INCORPORATED

MATERIAL NO. SEE CHART
DOCUMENT NO. SD-98944-010
SHEET NO. 2 OF 2

THIS DRAWING CONTAINS INFORMATION THAT IS PROPRIETARY TO MOLEX INCORPORATED AND SHOULD NOT BE USED WITHOUT WRITTEN PERMISSION

A1

tb_frame_A1_P_AM
rev. B1 2000/08/01