THIS DRAWING IS UNPUBLISHED. RELEASED FOR PUBLICATION - ,- .
© COPYRIGHT - By - ALL RIGHTS RESERVED.

LOC	DIST
AD	00

REVISIONS

P	LTR	DESCRIPTION	DATE	DWN	APVD
	T2	REVISED PER ECO-11-004820	11MAR11	RK	HMR

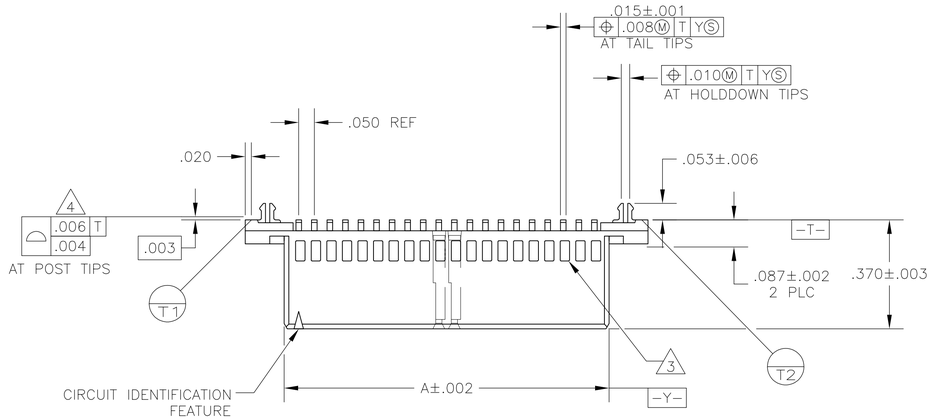

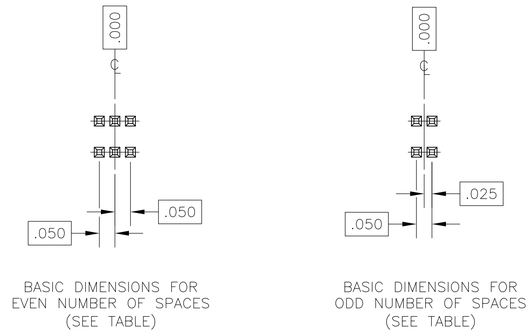

DETAIL R

1. .000030 GOLD IN LOCALIZED PLATE AREA, .000150 TIN-LEAD ON SOLDER TAILS ALL OVER .000050 NICKEL.
2. USE .0465±.0010 DRILLED HOLE (#56 DRILL) FINISH TO BE TIN-LEAD OVER .001 MINIMUM COPPER.
3. WINDOWS SHOWN ON SIDE OF HOUSING ARE MOLDERS OPTION.
4. REFER TO NO. OF POSN. IN CHART FOR NUMBER OF SURFACES WHICH ARE COPLANAR.
5. AMP LOGO PRESENCE AND LOCATION OPTIONAL.
6. .000030 GOLD IN LOCALIZED PLATE AREA, .000150 TIN ON SOLDER TAILS, ALL OVER .000050 NICKEL.
7. OBSOLETE PARTS: OBSOLETE CIS STREAMLINING PER D.RENAUD/D.SINISI

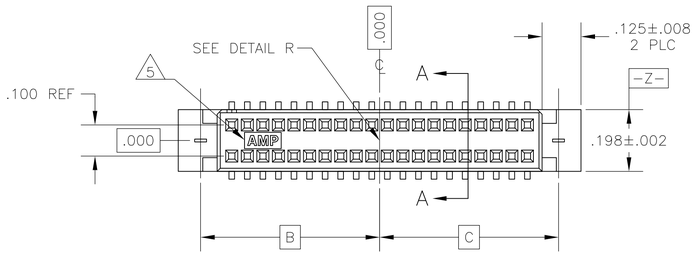

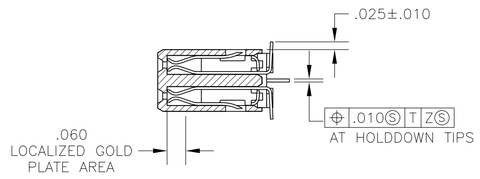

SECTION A-A

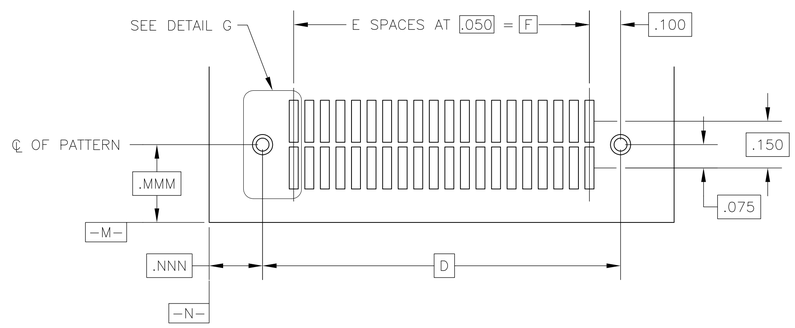

RECOMMENDED BOARD LAYOUT

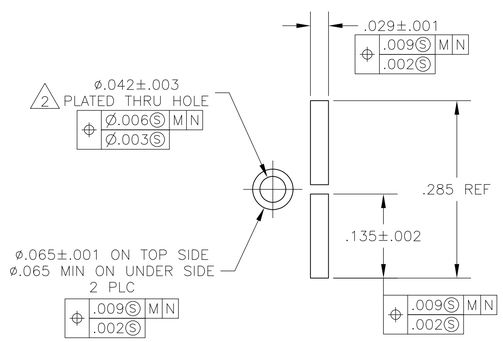

DETAIL G
SCALE 8:1

F	E	D	C	B	A	NO OF POSN	PART NUMBER
2.450	49	2.650	1.325	1.325	2.544	100	6 5-104550-9
1.950	39	2.150	1.075	1.075	2.044	80	6 5-104550-8
1.450	29	1.650	.825	.825	1.544	60	6 5-104550-7
1.200	24	1.400	.700	.700	1.294	50	6 5-104550-6
.950	19	1.150	.575	.575	1.044	40	6 5-104550-5
.700	14	.900	.450	.450	.794	30	6 5-104550-4
.550	11	.750	.375	.375	.644	24	6 5-104550-3
.450	9	.650	.325	.325	.544	20	6 5-104550-2
.200	4	.400	.200	.200	.294	10	6 5-104550-1
2.450	49	2.650	1.325	1.325	2.544	100	1 104550-9
1.950	39	2.150	1.075	1.075	2.044	80	1 104550-8
1.450	29	1.650	.825	.825	1.544	60	1 104550-7
1.200	24	1.400	.700	.700	1.294	50	1 104550-6
.950	19	1.150	.575	.575	1.044	40	1 104550-5
.700	14	.900	.450	.450	.794	30	1 104550-4
.550	11	.750	.375	.375	.644	24	1 104550-3
.450	9	.650	.325	.325	.544	20	1 104550-2
~~.200~~	~~4~~	~~.400~~	~~.200~~	~~.200~~	~~.294~~	~~10~~	7 SUP BY 5-104550-1 ~~1 104550-1~~

THIS DRAWING IS A CONTROLLED DOCUMENT.

DIMENSIONS: INCHES

TOLERANCES UNLESS OTHERWISE SPECIFIED:
0 PLC ± -
1 PLC ± -
2 PLC ± -
3 PLC ± .005
4 PLC ± -
ANGLES ± -

MATERIAL
HOUSING: PPA
COLOR: BLACK
CONTACT: PHOS BRONZE

FINISH
SEE TABLE

DWN R.K. SEIFRIED/UTA 07/16/92
CHK B ELICKER 10/23/92
APVD B ELICKER 10/23/92
PRODUCT SPEC —
APPLICATION SPEC —
WEIGHT —

TE Connectivity

NAME
RECEPTACLE ASSEMBLY, VERTICAL, DOUBLE ROW, SURFACE MOUNT, AMPMODU System 50

SIZE	CAGE CODE	DRAWING NO	RESTRICTED TO
A1	00779	C-104550	—

CUSTOMER DRAWING | SCALE 4:1 | SHEET 1 OF 1 | REV T2