NUMBER 60884

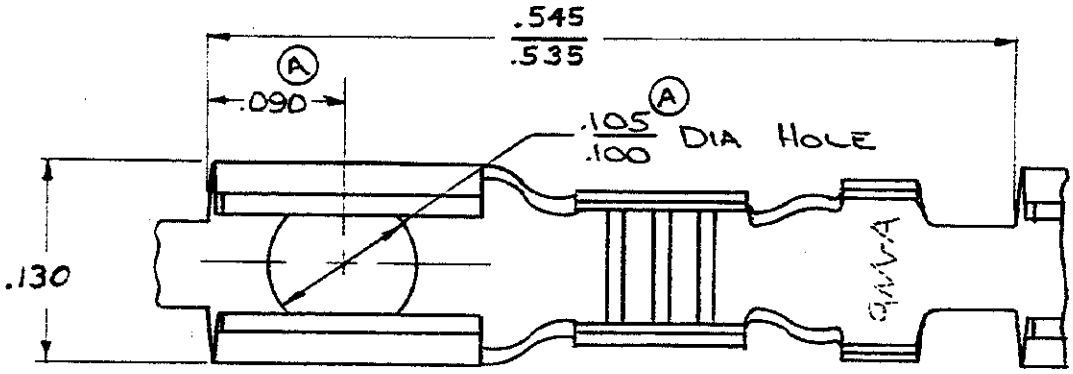

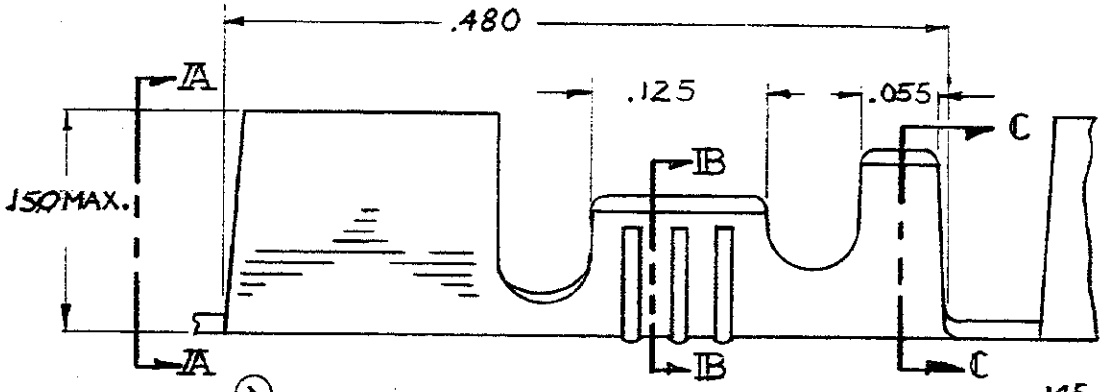

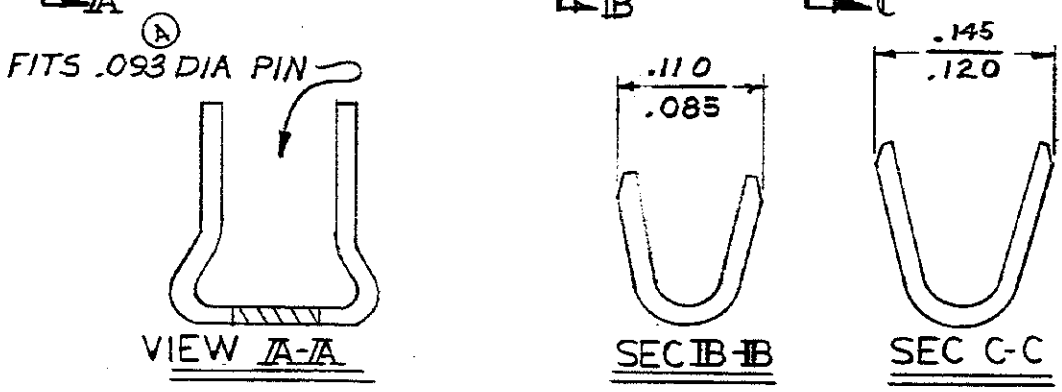

PART NUMBER	MATERIAL - FINISH
~~60884-1~~	~~.012 BRASS - NONE~~
~~60884-2~~	~~.012 PH BRONZE - PRE-TIN~~
60884-3	.012 BRASS - TIN

OBSOLETE

LTR	REVISION RECORD	DR	CHK	DATE
F	REACTIVATE AF-2032		64	5/25/66
E	OBS. PER AF1609	SS	47	8/8/66
D	OBS-60884-2 A-2749	SS		4/4/64
C	ADDED -2	NN		8/2/61
B	CHANGED DIST. A-47	LE		9-20-71
A	.093 WAS .086 ADDED .090; .105/.100 A-428	KAS	EMP	10-11-65
2	ADDED MAX. TO .150	EMP 401		9/17/65
1	.130 WAS .135	EMP		4/10/65
H	OBS.-1 AF-2699	TMB	JT	5/13/68
G	ADDED -3	67		8/5/80

©1965 BY AMP INCORPORATED. ALL RIGHTS RESERVED. AMP PRODUCTS COVERED BY PATENTS AND/OR PATENTS PENDING.

CUSTOMER COPY REFERENCE ONLY

MATERIAL AND FINISH

AMP INCORPORATED HARRISBURG, PENNA.

CLASS

TYPE

WIRE — RANGE — INSULATION: 22-18 | .100 MAX

TOLERANCE EXCEPT AS NOTED ± .015 ± 1° α

SCALE 4-1

LOC AF A

NO 60884

REV H

NAME: PIN RECEPTACLE

DR L. KENSINGER 6/7/65

CHK 6-14-65

APP H. J. DELL 6-14-65

PRINTED NOTE: DIMENSIONS IN INCHES. DO NOT SCALE PRINT.

50

AMP 1252 REV 7/60

CP-5026