Panasonic
ideas for life

AC Servo
MINAS A5 series
2009/10
Catalog

High performance, multi function and easy use,
all advanced.

DIGITAL AC SERVO MOTOR & DRIVER

MINAS A5

A small step for axis.
Large step ahead for system motion.

MINAS A5 Series

Five industry-leading advantages supported by a variety of new technologies and new features.

1 Quick

- 2.0 kHz frequency response
- 20 bits/revolution
- Low cogging torque
- The input/output pulse 4 Mpps

2 Smart

- Highly functional real-time auto-gain tuning
- Manual/auto notch filter
- Manual/auto damping filter
- Motion simulation

3 Light

- New structure
- Innovative core
- Innovative encoder

4 Safe

- Complies with European safety standards
- Low noise
- IP67 enclosure rating

5 Easy

- Set-up support software
  Localized in 4 languages
  Service life prediction
  Encoder temperature monitor

Contents

Features 2

Motor Line-up/ Driver and Motor Combination 10

Model Designation 11

Peripheral equipments configuration 12

List of recommended peripheral equipments 14

Table of Part Numbers and Options 16

Driver

Common Specifications of Driver

A5 series (Standard type) 18

A5E series (Positioning type) 20

Wiring example of main circuit

Wiring to the Connector XA, XB, XC, XD 22

Safety function

Wiring to the Connector X3 24

Control circuit wiring diagram

Wiring to the Connector X4 25

Wiring to the Connector X5 27

Wiring to the Connector X6 28

Dimensions of Driver 30

Motor

Specifications of Motor 35

Motor specifications, ratings and Dimensions 36

Describes motor specifications 104

OPTION

Conformance to EC Directives / UL Standards 106

Cable part number designation 110

Specifications of motor connector 111

Junction Cable for Encoder 112

Junction Cable for Motor 114

Junction Cable for Brake 117

Connector kit 118

Battery for absolute encoder 125

Mounting bracket 126

Reactor 127

External regenerative resister 128

Surge absorber for motor brake 129

List of manufactures for peripheral equipments 130

Information F1

Index F25

Sales office F32

MINAS A5 series Line-up

1 Quick

2.0 kHz frequency response

2.0kHz

Example application Semiconductor production equipment, packaging, etc.

Achieves the industry's fastest frequency response of 2.0 kHz.

Operation speed up by new developed LSI and high responsible control. **By the industry's fastest speed and positioning response, a highly advanced system can be created. What's more, the shorter response delay will realize an to extremely lower vibration.**

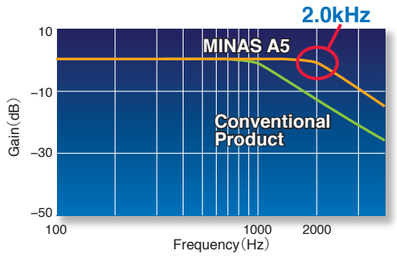

20 bits/revolution, 1.04 million pulses

20 bits/rev

Example application Machine tools, textile machinery, etc.

Ensures smoother operation and reduced vibration at stopping.
Ensures accurate positioning in a short time.

New proprietary signal processing technology achieves 1.04 million pulses with a 20-bit encoder.

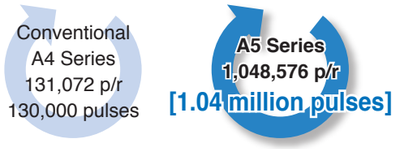

Low cogging torque (Excluding MSMD, MHMD type)

Low cogging

Example application Semiconductor production equipment, textile machinery, etc.

For the industry's most stable speed and lowest cogging

We've achieved the industry's lowest cogging by minimizing the pulse width by a new design incorporating a 10-pole rotor for the motor and a magnetic field parsing technique. **Positioning and stability are greatly improved by the minimal torque variation. This results to improved speed stability and positioning of motor rotation.**

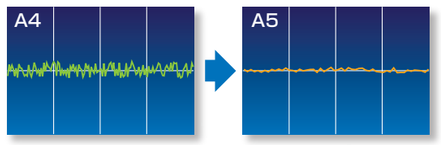

Vibration reduced to only **1/8**

The input/output pulse 4 Mpps

4 Mpps

Example application Semiconductor production equipment, machine tools, etc.

Accommodates the industry's leading positioning resolution commands (with pulse train commands).

The command input and feedback output operate at the high speed of 4 Mpps. Accommodates high-resolution and high-speed operation, including standard full closed operation.

2 Smart

Highly Functional Real-time Auto-Gain Tuning

Auto tuning

Example application Semiconductor production equipment, food processing machinery, etc.

Incorporates the industry's quickest high-performance real-time auto-gain tuning featuring simple setup.

After installation, tuning is completed automatically in several operations. When the response is adjusted, **simple tuning** is supported with a change to one parameter value. Use of the gain adjustment mode in the setup support software contributes to optimum adjustment. **The built-in auto vibration suppression function reduces equipment damage.** Appropriate modes are provided for various machines such as **vertical axis machines and high friction machines with belts**.

This makes it possible to perform simple optimal adjustments simply by selecting the mode and stiffness.

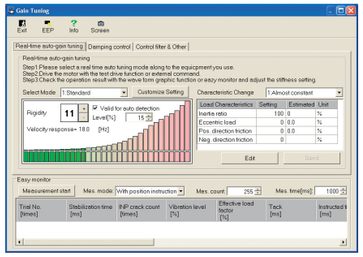

Manual/Auto Notch Filters

Nocth filters

Example application Semiconductor production equipment, food processing machinery, etc.

Equipped with auto-setting notch filters for greater convenience.

Now there is no need to measure troublesome vibration frequencies. Our notch filters automatically detect vibration and provide simple auto-setting. These notch filters greatly reduce noise and vibration caused by equipment resonance and respond quickly during operation. The A5 Series features an industry-largest total of four notch filters with setup frequencies of 50 to 5,000 Hz. This approach enables depth adjustment within this frequency range. (Two of the filters share the auto set-up.)

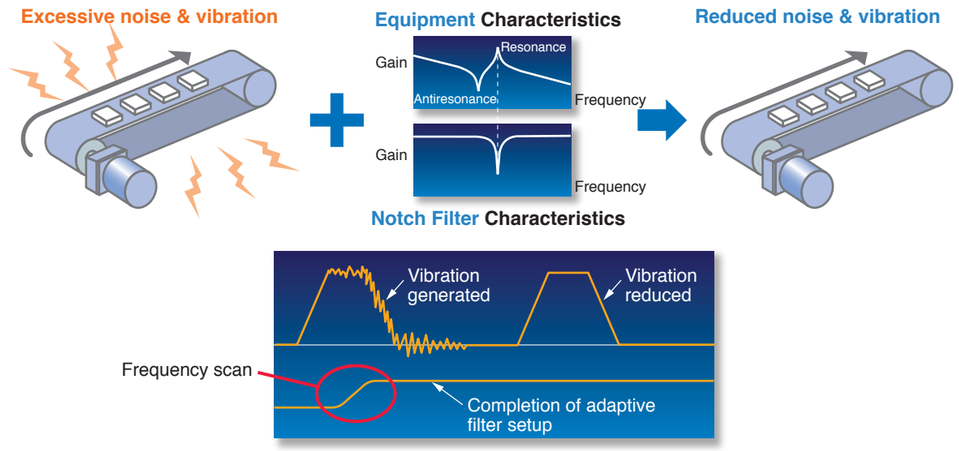

Manual/Auto Damping Filter

Damping filter

Example application Chip mounters, food processing machinery, robots, general production machinery, etc.

Equipped with a damping filter featuring simplified automatic setup.

The setup software features automatic setup of the damping filter. **This filter removes the natural vibration frequency component from the command input, greatly reducing vibration of the axis when stopping.** The number of filters has been increased to four from the conventional two filters (two for simultaneous use). The adaptive frequency has also been significantly expanded from 1 to 200 Hz.

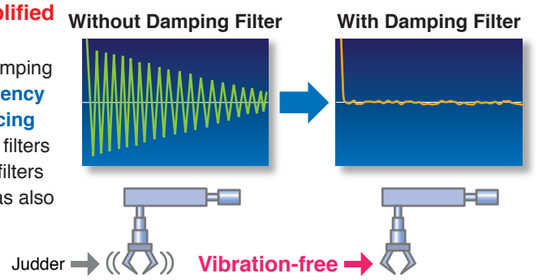

Motion Simulation

Simulation

Example application General production machinery, etc.

Equipped with a simplified machine simulation function.

The setup software uses frequency response data acquired from the actual machine. In addition, it features a machine simulation function for performing simulated operation. **This allows you to easily confirm the effects of gain and various filters without adjusting the actual equipment.**

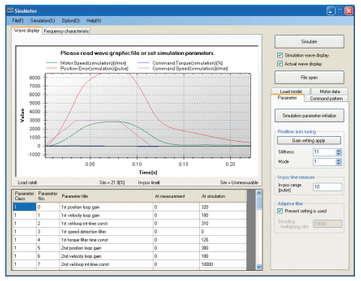

3
Light

New Structure/ Innovative Core/ Innovative Encoder (Excluding MSMD, MHMD type)

New structure
Innovative core
Innovative encoder

Example application Robots, chip mounters, general production machinery, etc.

Featuring significantly reduced weight and a more compact motor

We've developed new designs for both compact motors and large motors. The new design used for the core has succeeded in compact. **The addition of an innovative compact encoder has contributed to a 10% to 25% (1 to 6 kg) reduction in motor weight in the 1 kW and larger class when compared with conventional motors.**

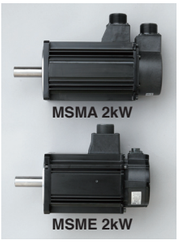

[Examples for MSM or MDM]

	A4 Series	A5 Series	Weight Reduction
MSM 1kW	4.5kg	3.5kg	▲1kg
MSM 2kW	6.5kg	5.3kg	▲1.2kg
MDM 1kW	6.8kg	5.2kg	▲1.6kg
MDM 2kW	10.6kg	8.0kg	▲2.6kg

4
Safe

Complies with European Safety Standards. (A5E series doesn't correspond to the safety standard.)

Safe torque off

Example application Semiconductor and LCD production equipment, etc.

Complies with the latest European safety standards.

Features non-software-based (hardware-based?) independent redundant circuitry for motor power isolation. This obviates the need for magnetic contactors to isolate the required motor in order to accommodate low-voltage machinery commands. (The final safety compliance must be applied as machine.)

Low noise

Low noise

Example application Semiconductor and LCD production equipment, etc. general production machinery for export to the European market

Complies with the European EMC Directive

By incorporating the latest circuit technology, A5 series achieves a further noise reduction of 3dB compared with the conventional A4 Series, which also features noise suppression. (The A4 Series also conforms to the EMC Directive.)

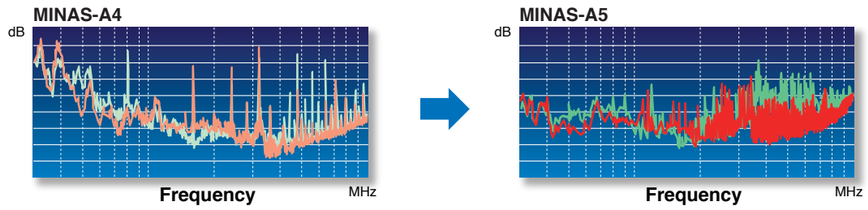

IP67 Enclosure Rating (Excluding MSMD, MHMD type)

IP67

Example application Machine tools, robots, printing machines, etc.

IP67 enclosure rating for increased environmental resistance

Our improved motor seals and direct-mount connectors in the motor power supply and encoder input-output areas contribute to this unit's IP67 enclosure rating.

IP67

- Protection against dust
  - Protected against dust penetration when in full contact
- Protection against water
  - Protection against temporary immersion in water

IP65: MSMD, MHMD series

5
Easy

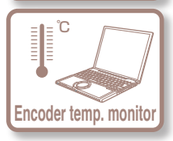

PANATERM Set-up Support Software

Introducing the new PANATERM Set-up Support Software, now with many added features.

Localized in 4 languages

Choose either **English, Japanese, Chinese, or Korean***-language display.

* The Korean-language version is scheduled for release in December.

Service Life Prediction

The service life prediction function considers the internal temperature for main components such as the fan and condenser. If the rated value is exceeded, an alarm is displayed. **This approach prevents unexpected suspension of operation and allows for planning of systemized maintenance.**

Note: The life span prediction value should be considered as a guide only.

Encoder Temperature Monitor

The Encoder Temperature Monitor is a new function capable of **real-time measurement of the interior temperature of the encoder, something that has been difficult to achieve in the past**. It is valuable for monitoring the motor and can be used as a diagnostic in the event of a malfunction (provided with 20-bit encoder only).

Other New Function

The software offers a wide range of convenient features including motor and driver data such as load factor, voltage, and driver temperature. Moreover, the logging function records the interface history. As well, the trial run function supports positioning with a Z-phase search and software limit as well as a non-rotating contributing factor display function.

・**Service Life Prediction function**
(Screen shown for reference only.)

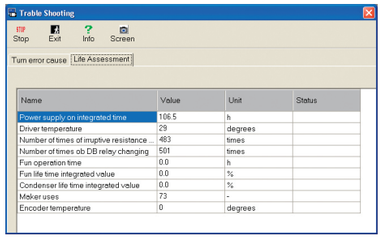

・**The Data Logging function handles a variety of data types.**

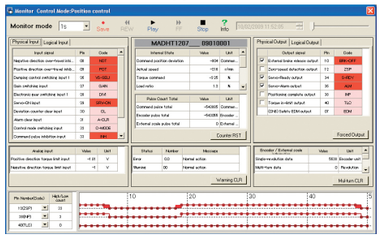

Other Functions

Command Control Mode (Excluding A5E Series)

- Command control mode is available for Position, Speed (including eight internal gears) and Torque.
- Using parameter settings, you can set up one optional command control mode or two command control modes by switching.
- With a suitable application utility, you can choose an optional command control mode.

Full closed Control (Excluding A5E Series)

You can use the AB-phase linear scale (for general all-purpose products) or the serial scale (for products with Panasonic□s exclusive format) for supported scales (see table below).

SEMI F47

- Includes a function in compliance with the SEMI F47 standard for voltage sag immunity under no load or light load.
- Ideal for the semiconductor and LCD industries.

Notes:
1) Excluding the single-phase 100-V type.
2) Please verify the actual compliance of your machine with the F47 standard for voltage sag immunity.

6,000-rpm capability

The MSME motor (under 750 W) can accommodate a maximum speed of 6,000 r/min.

[Comparison of new and conventional 200 W]

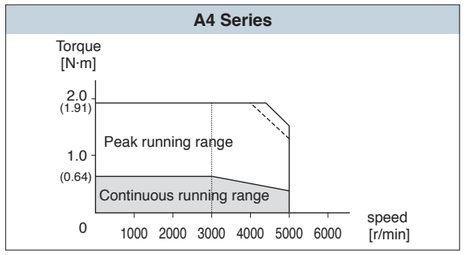

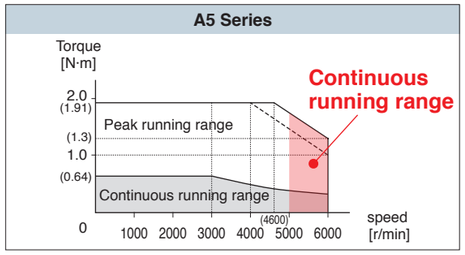

Inrush Current Preventive Function

- This driver is equipped with a rush current preventive resistor to prevent the circuit breaker from shutting off the power supply as a result of inrush current occurring at power-on.

Table 1

Applicable Linear Scale	Manufacturer	Model No.	Resolution [μs]	Maximum Speed (m/s) *
Parallel Type (AB-phase)	General	—	Maximum speed after 4 × multiplication: 4 Mpps	
Serial Type (Incremental)	Sony Manufacturing Systems Corporation	SR75	0.01	3.3
		SR85	0.01	3.3
		SL700/PL101-RP	0.1	10
		SL710/PL101-RP	0.1	10
Serial Type (Absolute)	Mitutoyo Corporation	AT573A	0.05	2
		ST771A(L)	0.5	5
		ST773A(L)	0.1	4
	Sony Manufacturing Systems Corporation	SR77	0.01	3.3
		SR87	0.01	3.3

* The maximum speed is a characteristic of the driver. It is limited by the configuration of the machine and the system.

Regenerative Energy Discharge

- A regenerative resistor is used to discharge regenerative energy, which is the energy generated when stopping a load with a large moment of inertia or when using this unit in vertical operation. This energy is returned to the driver from the motor.
- Frame A and Frame B model drivers do not contain a regenerative resistor. We recommend that you connect an optional regenerative resistor.
- Frame C to Frame F model drivers contain one regenerative resistor; however, adding an optional regenerative resistor provides additional regeneration capability.

Dynamic Braking

- With parameter settings, you can select dynamic braking, which shorts servomotor windings U, V and W at Servo-OFF, during positive direction/ negative direction over-travel inhibition, and during power shutdown and tripping of the circuit breaker.
- The desired action sequence can be set up to accommodate your machine requirements.

Parameter Initialization

Using the front panel or by connecting a PC, you can restore the parameters to the factory settings.

Disturbance Observer

By using a disturbance observer to add an estimated disturbance torque value to the torque canceling command, this function diminishes the impact of the disturbance torque, reduces vibration, and offsets any speed decline.

Disturbance observer function not in effect

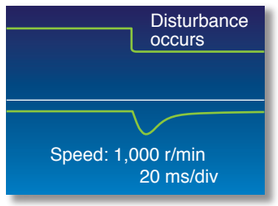

Disturbance observer function in effect

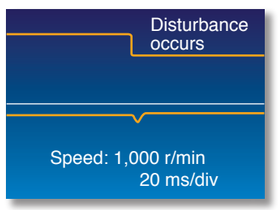

Torque Feed Forward

The Torque Feed Forward function performs a comparison with feedback and calculates the amount of torque to add to the necessary torque command in the command for actuation.

Friction Torque Compensation

This function reduces the effect of machine-related friction and improves responsiveness. Two kinds of friction compensation can be set up: unbalanced load compensation, which compensates with a constant operational offset torque; and kinetic friction, which changes direction in response to the direction of movement.

3-Step Gain

A 3-step gain switch is available in addition to the normal gain switch.
This chooses appropriate gain tunings at both stopping and running.
The 3-step gain switch gives you choices of 3 diffent tunings for normal running, stopping for faster positioning and at stopping.
The right gaing tunings achieve lower vibration and quicker positioning time of your application.

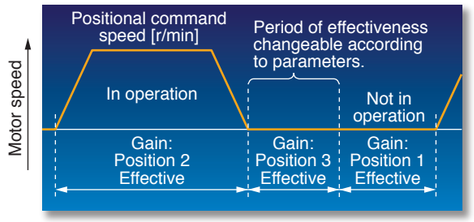

Inertia Ratio Conversion

You can adjust right inertia ratio by Inertia Ratio Conversion input(J-SEL).
When you have significant load inertia changes, it can adjust unbalanced speed and position gain turning conbination.
It ends up quicker response of your system.

Input/Output Signal Assignment

You can use the parameters to arbitrarily allocate the universal 10 inputs and 6 outputs. (Inputs can be selected as either A contacts or B contacts). The Panaterm setup software provides an exclusive screen for a more simplified setup.

Torque Limiter Switching

You can use the I/Os to set up torque limits. These can be used for applications such as simplified pressure, tension control, and sensor-less homing.

Applicable overseas safety standards

		Driver	Motor
EC Directives	EMC Directives	EN55011 EN61000-6-2 IEC61800-3	–
	Low-Voltage Directives	EN61800-5-1	EN60034-1 EN60034-5
	Functional safety	EN954-1(CAT3) ISO13849-1(PL-D) EN61508(SIL2) EN62061(SIL2) EN61800-5-2(STO) IEC61326-3-1	–
UL Standards		UL508C (E164620)	UL1004-1 (E327868: Small type) UL1004 (E166557: Large type)
CSA Standards		C22.2 No.14	C22.2 No.100

IEC : International Electrotechnical Commission
EN : Europaischen Normen
EMC : Electromagnetic Compatibility
UL : Underwriters Laboratories
CSA : Canadian Standards Association

Pursuant to the directive 2004/108/EC, article 9(2)
Panasonic Testing Centre
Panasonic Service Europe, a division of
Panasonic Marketing Europe GmbH
Winsbergring 15, 22525 Hamburg, F.R. Germany

* When export this product, follow statutory provisions of the destination country.
* A5E series doesn't correspond to the functional safety standard.

MEMO

Motor Line-up/ Driver and Motor Combination

Motor Line-up

		Low inertia			Middle inertia		High inertia	
Motor		MSMD (Small type)	MSME (Small type)	MSME (Large type)	MDME	MGME (Low speed/ High torque type)	MHMD	MHME
								
Rated output (kW)		0.05 0.1 0.2 0.4 0.75	0.05 0.1 0.2 0.4 0.75	1.0 1.5 2.0 3.0 4.0 5.0	1.0 1.5 2.0 3.0 4.0 5.0	0.9 2.0 3.0	0.2 0.4 0.75	1.0 1.5 2.0 3.0 4.0 5.0
Rated rotational speed (Max. speed) (r/min)		3000 (5000) For 750W 3000 (4500)	3000 (6000)	3000 (5000) For 4.0kW and 5.0kW 3000 (4500)	2000 (3000)	1000 (2000)	3000 (5000) For 750W 3000 (4500)	2000 (3000)
Rotary encoder	20-bit incremental	○	○	○	○	○	○	○
	17-bit absolute	○	○	○	○	○	○	○
Enclosure		IP65 (*)	IP67 (*)	IP67 (*)	IP67 (*)	IP67 (*)	IP65 (*)	IP67 (*)
Features		• Leadwire type • Small capacity • Suitable for high speed application • Suitable for all applications	• Small capacity • Suitable for high speed application • Suitable for all applications	• Middle capacity • Suitable for the machines directly coupled with ball screw and high stiffness and high repetitive application	• Middle capacity • Suitable for low stiffness machines with belt driven	• Middle capacity • Flat type and suitable for machines with space limitation	• Leadwire type • Small capacity • Suitable for low stiffness machines with belt driven	• Middle capacity • Suitable for low stiffness machines with belt driven, and large load moment of inertia
Applications		• Bonder • Semiconductor production equipment • Packing machines etc		• SMT machines • Food machines • LCD production equipment	• Conveyors • Robots • Machine tool etc	• Conveyors • Robots • Textile machines etc	• Conveyors • Robots	• Conveyors • Robots • LCD manufacturing equipment etc

(*) Except for output shaft, and connector.

Driver and Motor Combination

Driver		Motor						
Frame	Part No.	MSMD	MSME	MSME	MDME	MGME	MHMD	MHME
A-Frame	MADHT1105	MSMD5AZ∗∗∗	MSME5AZ∗∗∗					
	MADHT1107	MSMD011∗∗∗	MSME011∗∗∗					
	MADHT1505	MSMD5AZ∗∗∗	MSME5AZ∗∗∗					
		MSMD012∗∗∗	MSME012∗∗∗					
	MADHT1507	MSMD022∗∗∗	MSME022∗∗∗				MHMD022∗∗∗	
B-Frame	MBDHT2110	MSMD021∗∗∗	MSME021∗∗∗				MHMD021∗∗∗	
	MBDHT2510	MSMD042∗∗∗	MSME042∗∗∗				MHMD042∗∗∗	
C-Frame	MCDHT3120	MSMD041∗∗∗	MSME041∗∗∗				MHMD041∗∗∗	
	MCDHT3520	MSMD082∗∗∗	MSME082∗∗∗				MHMD082∗∗∗	
D-Frame	MDDHT3530				MDME102∗∗∗			MHME102∗∗∗
	MDDHT2412				MDME104∗∗∗			MHME104∗∗∗
	MDDHT5540			MSME102∗∗∗	MDME152∗∗∗	MGME092∗∗∗		MHME152∗∗∗
				MSME152∗∗∗				
	MDDHT3420			MSME104∗∗∗	MDME154∗∗∗	MGME094∗∗∗		MHME154∗∗∗
				MSME154∗∗∗				
E-Frame	MEDHT7364			MSME202∗∗∗	MDME202∗∗∗			MHME202∗∗∗
	MEDHT4430			MSME204∗∗∗	MDME204∗∗∗			MHME204∗∗∗
F-Frame	MFDHTA390			MSME302∗∗∗	MDME302∗∗∗	MGME202∗∗∗		MHME302∗∗∗
	MFDHT5440			MSME304∗∗∗	MDME304∗∗∗	MGME204∗∗∗		MHME304∗∗∗
	MFDHTB3A2			MSME402∗∗∗	MDME402∗∗∗	MGME302∗∗∗		MHME402∗∗∗
				MSME502∗∗∗	MDME502∗∗∗			MHME502∗∗∗
	MFDHTA464			MSME404∗∗∗	MDME404∗∗∗	MGME304∗∗∗		MHME404∗∗∗
				MSME504∗∗∗	MDME504∗∗∗			MHME504∗∗∗

Motor (Scheduled to be released.)
- MDME 7.5kW, 11kW, 15kW
- MHME 7.5kW
- MGME 4.5kW, 6.0kW
- MFME 1.5kW, 2.5kW, 4.5kW
- Motor with Gear Reduce: 100W, 200W, 400W, 750W

* A5E series (dedicated for position control) drivers are also used in combination with motors show above.

Model Designation

Servo Motor

M S M E 5 A Z G 1 S ∗ ∗

Special specifications

Motor specifications
MSME(50W to 750W), MSMD, MHMD

Symbol	Shaft: Round	Shaft: Key-way, center tap	Holding brake: without	Holding brake: with	Oil seal: without	Oil seal: with
A	●		●		●	
B	●			●	●	
C	●		●			●
D	●			●		●
S		●	●		●	
T		●		●	●	
U		●	●			●
V		●		●		●

MSME(1.0kW to 5.0kW), MDME, MGME, MHME

Symbol	Shaft: Round	Shaft: Key-way	Holding brake: without	Holding brake: with	Oil seal: without	Oil seal: with
C	●		●			●
D	●			●		●
G		●	●			●
H		●		●		●

Design order
1 : Standard

Symbol	Type
MSMD	Low inertia (50W to 750W)
MSME	Low inertia (50W to 5.0kW)
MDME	Middle inertia (1.0kW to 5.0kW)
MGME	Middle inertia (0.9kW to 3.0kW)
MHMD	High inertia (200W to 750W)
MHME	High inertia (1.0kW to 5.0kW)

Motor rated output

Symbol	Rated output	Symbol	Rated output
5A	50W	10	1.0kW
01	100W	15	1.5kW
02	200W	20	2.0kW
04	400W	30	3.0kW
08	750W	40	4.0kW
09	0.9kW	50	5.0kW

Voltage specifications

Symbol	Specifications
1	100V
2	200V
4	400V
Z	100V/200V common (50W only)

Rotary encoder specifications

Symbol	Format	Pulse counts	Resolution	Wires
G	Incremental	20-bit	1,048,576	5
S	Absolute	17-bit	131,072	7

* S: can be used in incremental.

Motor with reduction gear

M S M E 0 1 1 G 3 1 N

Gear ratio, gear type

Symbol	Gear reduction ratio	Motor output (W): 100	200	400	750	Gear type
1N	1/5	●	●	●	●	For high accuracy
2N	1/9	●	●	●	●	
3N	1/15	●	●	●	●	
4N	1/25	●	●	●	●	

Motor structure

Symbol	Shaft: Key-way	Holding brake: without	Holding brake: with
3	●	●	
4	●		●

Symbol	Type
MSME	Low inertia (50W to 750W)

Motor rated output

Symbol	Rated output
01	100W
02	200W
04	400W
08	750W

Voltage specifications

Symbol	Specifications
1	100V
2	200V

Rotary encoder specifications

Symbol	Format	Pulse counts	Resolution	Wires
G	Incremental	20-bit	1,048,576	5
S	Absolute	17-bit	131,072	7

* S: can be used in incremental.

Servo Driver

Standard type **M A D H T 1 5 0 5 ∗ ∗ ∗** — **Special specifications**

Positioning type **M A D H T 1 5 0 5 E ∗ ∗** — **Special specifications**

Only position control

Frame symbol

Symbol	Frame
MADH	Frame A
MBDH	Frame B
MCDH	Frame C
MDDH	Frame D
MEDH	Frame E
MFDH	Frame F

Power device Max. current rating

Symbol	Current rating
T1	10A
T2	15A
T3	30A
T4	35A
T5	50A
T7	75A
TA	100A
TB	150A

Supply voltage specifications

Symbol	Specifications
1	Single phase, 100V
3	3-phase, 200V
4	3-phase, 400V
5	Single/3-phase, 200V

Current detector current rating

Symbol	Current rating
05	5A
07	7.5A
10	10A
12	12A
20	20A
30	30A
40	40A
64	64A
90	90A
A2	120A

Overall Wiring

[Connector type (A to E-frame)]

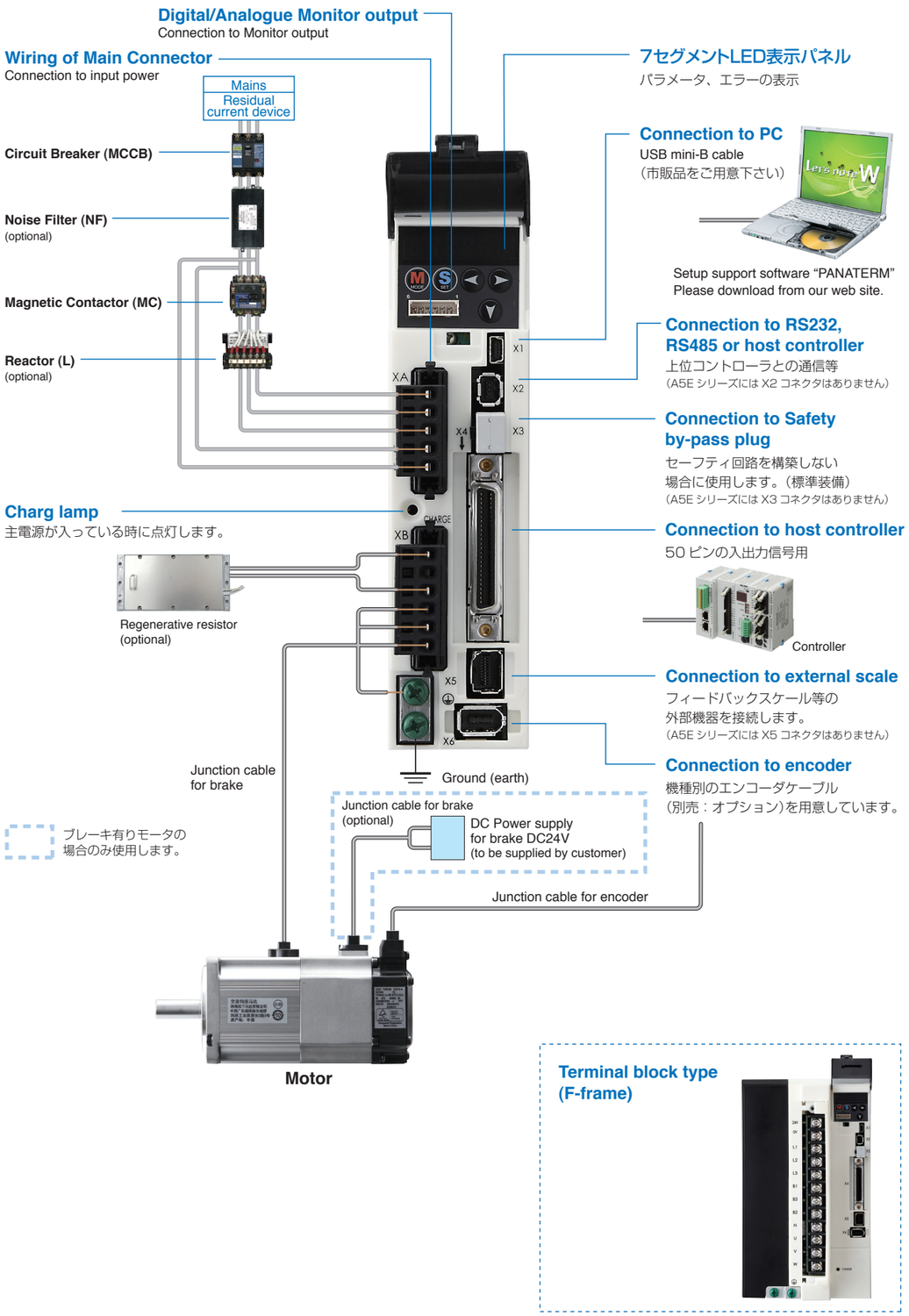

[Connector type (D, E-frame 400V)]

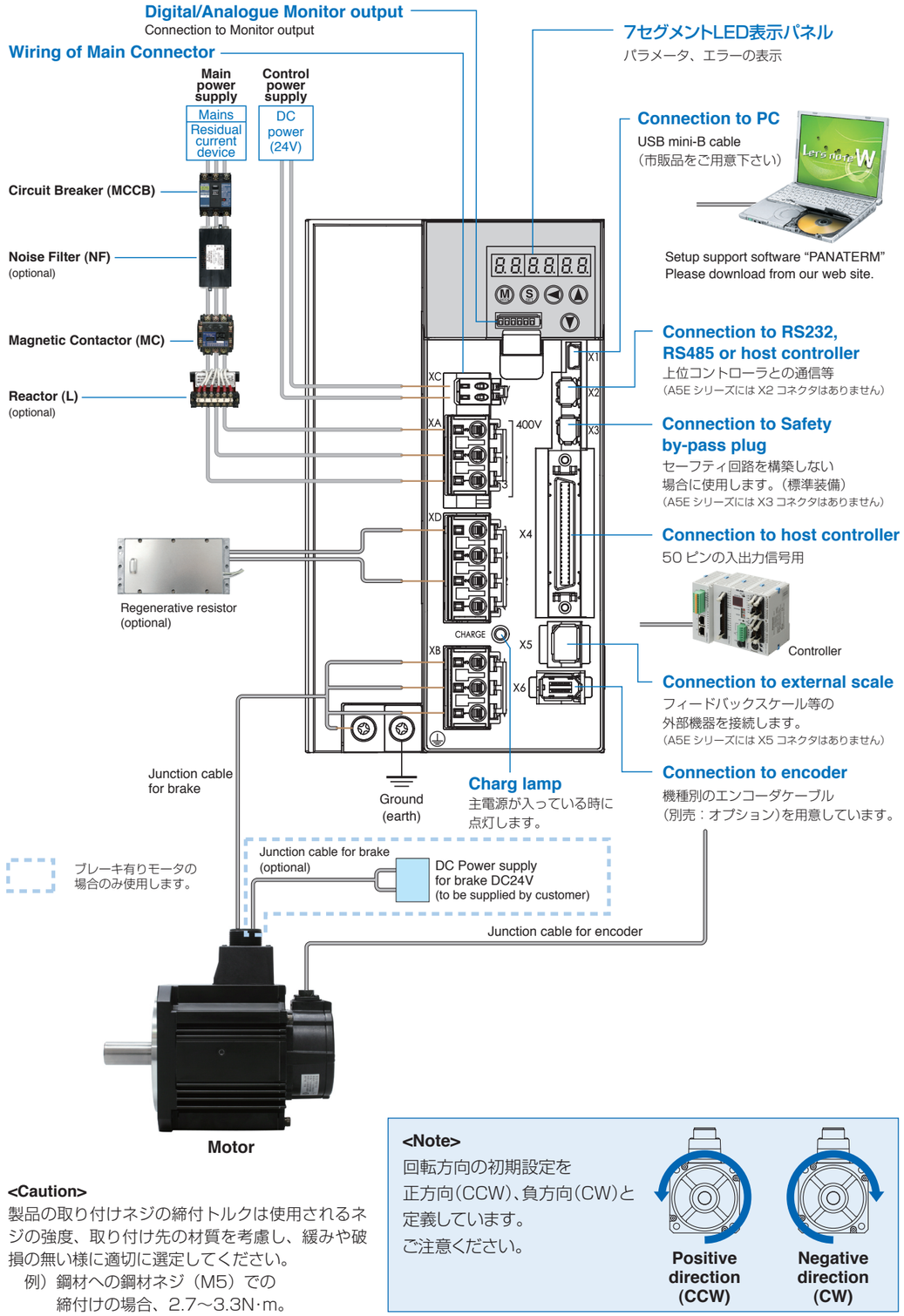

<Caution>
製品の取り付けネジの締付トルクは使用されるネジの強度、取り付け先の材質を考慮し、緩みや破損の無い様に適切に選定してください。
例）鋼材への鋼材ネジ（M5）での
締付けの場合、2.7～3.3N·m。

<Note>
回転方向の初期設定を
正方向(CCW)、負方向(CW)と
定義しています。
ご注意ください。

Driver and List of Applicable Peripheral Equipments

Driver	Applicable motor	Voltage	Rated output	Required Power (at the rated load)	Circuit breaker (rated current)	Surge absorber	Noise filter for signal	Magnetic contactor (定格通電電流／開放熱電流)	Cable diameter (main circuit)	Cable diameter (control circuit)	Connection
MADH	MSMD MSME MHMD	Single phase, 100V	50W to 100W	approx. 0.4kVA	10A	DV0P4190	DV0P1460	20A	0.75mm²/ AWG18 to 2.0mm²/ AWG14	0.75mm²/ AWG18	Connection to exclusive connector
		Single/3-phase, 200V	50W to 200W	approx. 0.5kVA		DV0P4190 DV0P1450					
MBDH	MSMD MSME MHMD	Single phase, 100V	200W	approx. 0.5kVA		DV0P4190					
		Single/3-phase, 200V	400W	approx. 0.9kVA		DV0P4190 DV0P1450					
MCDH	MSMD MSME MHMD	Single phase, 100V	400W	approx. 0.9kVA		DV0P4190					
		Single/3-phase, 200V	750W	approx. 1.3kVA	15A	DV0P4190 DV0P1450					
MDDH	MDME	Single/3-phase, 200V	1.0kW	approx. 1.8kVA				30A	2.0mm²/ AWG14		
	MHME										
	MGME		900W	approx. 1.8kVA	20A						
	MSME		1.0kW	approx. 1.8kVA							
	MHME		1.5kW	approx. 2.3kVA							
	MDME										
	MSME										
	MSME	3-phase, 400V	1.0kW	approx. 1.8kVA	10A	DV0PM20050		20A		0.5mm²/ AWG 20～24	
	MDME										
	MHME										
	MGME		0.9kW								
	MSME		1.5kW	approx. 2.3kVA							
	MDME										
	MHME										
MEDH	MDME MSME MHME	3-phase, 200V	2.0kW	approx. 3.3kVA	30A	DV0P1450		60A		0.75mm²/ AWG18	
	MSME MDME MHME	3-phase, 400V	2.0kW	approx. 3.3kVA	15A	DV0PM20050		30A		0.5mm²/ AWG 20～24	
MFDH	MGME	3-phase, 200V	2.0kW	approx. 3.8kVA	50A	DV0P1450		60A	3.5mm²/ AWG12	0.75mm²/ AWG18	Terminal block M5 (11mm or smaller, φ5.3)
	MDME		3.0kW	approx. 4.5kVA							
	MHME										
	MSME										
	MGME										
	MDME		4.0kW	approx. 6kVA				100A			
	MHME										
	MSME										
	MDME		5.0kW	approx. 7.5kVA					5.3mm²/ AWG10		
	MHME										
	MSME										
	MGME	3-phase, 400V	2.0kW	approx. 3.8kVA	30A	DV0PM20050		60A	3.5mm²/ AWG12		
	MSME		3.0kW	approx. 4.5kVA							
	MDME										
	MGME										
	MHME										
	MSME		4.0kW	approx. 6.8kVA							
	MDME										
	MHME										
	MSME		5.0kW	approx. 7.5kVA							
	MDME										
	MHME										

- Select peripheral equipments for single/3phase common specification according to the power source.
- About circuit breaker and magnetic contactor

  To comply to EC Directives, install a circuit breaker between the power and the noise filter without fail, and the circuit breaker should conform to IEC Standards and UL recognized (Listed and Ⓤ marked).

  Suitable for use on a circuit capable of delivering not more than 5,000 rms symmetrical amperes, below the maximum input voltage of the product.

  If the short-circuit current of the power supply exceeds this value, install a current limit device (current limiting fuse, current limiting circuit breaker, transformer, etc.) to limit the short-circuit current.

<Remarks>

- Select a circuit breaker and noise filter which match to the capacity of power supply (including a load condition).
- Terminal block and protective earth terminals

  Use a copper conductor cables with temperature rating of 75˚C or higher.

  The screws of protective earth terminals for Frame A to D are M4 (Fastening torque: 0.7 to 0.8N·m) and M5 (Fastening torque: 1.4 to 1.6N·m) for Frame E, F.

  Fastening torque of earth screws.

  Tighten the terminal block screw on frame F with a torque between 1.0 and 2.0 N·m. Application of overtorque (more than 2.0 N·m) will cause damage to terminal block. Maximum allowable torque to the screw securing terminal block cover is 0.19 to 0.21 N·m.
- The cable diameter of an earth cable.

  Use an earth cable with the same diameter or larger as that of the main circuit cable.

  If the diameter of the main circuit cable is 1.6mm² or less, use an earth cable with a diameter of 2.0mm² (AWG14).
- Use the attached exclusive connector for A to E-frame, and maintain the peeled off length of 8 to 9mm.
- Tighten the screws of the connector, Connector X4 for the host controller with the torque of 0.3 to 0.35 N·m.

  Larger torque than 0.35N·m may damage the connector at the driver side.

<Caution>

Do not turn on power without tightening all terminal block screws properly, otherwise, loose contacts may generate heat (smoking, firing).

Table of Part Numbers and Options

Motor						Driver				Optional parts								
Motor series		Power supply	Output (W)	Part No. Note) 1	Rating/ Spec. (page)	Part No. (Standard type)	Part No. (Positioning type)	Frame	Power capacity (atrated load)	Encoder cable: 20-bit Incremental Note) 2	Encoder cable: 17-bit Absolute Note) 2	Motor cable: without brake Note) 2	Motor cable: with brake Note) 2	Brake cable Note) 2	Regenerative resistor	Reactor	Noise filter
Low inertia	MSMD (Leadwire type) 3000r/min	Single phase 100V	50	MSMD5AZ□1＊	66	MADHT1105	MADHT1105E	A-frame	Approx. 0.4kVA	MFECA 0**0EAM	MFECA 0**0EAE	MFMCA 0**0EED	—	MFMCB 0**0GET	DV0P4280	DV0P227	DV0P4170
			100	MSMD011□1＊	68	MADHT1107	MADHT1107E		Approx. 0.4kVA								
			200	MSMD021□1＊	70	MBDHT2110	MBDHT2110E	B-frame	Approx. 0.5kVA						DV0P4283	DV0P228	
			400	MSMD041□1＊	72	MCDHT3120	MCDHT3120E	C-frame	Approx. 0.9kVA						DV0P4282		DV0PM20042
		Single phase/ 3-phase 200V	50	MSMD5AZ□1＊	67	MADHT1505	MADHT1505E	A-frame	Approx. 0.5kVA						DV0P4281	DV0P220	
			100	MSMD012□1＊	69	MADHT1505	MADHT1505E		Approx. 0.5kVA								
			200	MSMD022□1＊	71	MADHT1507	MADHT1507E		Approx. 0.5kVA								DV0PM20042
			400	MSMD042□1＊	73	MBDHT2510	MBDHT2510E	B-frame	Approx. 0.9kVA						DV0P4283	DV0P221	
			750	MSMD082□1＊	74	MCDHT3520	MCDHT3520E	C-frame	Approx. 1.3kVA								
	MSME 3000r/min	Single phase 100V	50	MSME5AZ□1＊	36	MADHT1105	MADHT1105E	A-frame	Approx. 0.4kVA	MFECA 0**0MJD	MFECA 0**0MJE	MFMCA 0**0NJD	—	MFMCB 0**0PJT	DV0P4280	DV0P227	DV0P4170
			100	MSME011□1＊	38	MADHT1107	MADHT1107E		Approx. 0.4kVA								
			200	MSME021□1＊	40	MBDHT2110	MBDHT2110E	B-frame	Approx. 0.5kVA						DV0P4283	DV0P228	
			400	MSME041□1＊	42	MCDHT3120	MCDHT3120E	C-frame	Approx. 0.9kVA						DV0P4282		DV0PM20042
		Single phase/ 3-phase 200V	50	MSME5AZ□1＊	37	MADHT1505	MADHT1505E	A-frame	Approx. 0.5kVA						DV0P4281	DV0P220	
			100	MSME012□1＊	39	MADHT1505	MADHT1505E		Approx. 0.5kVA								
			200	MSME022□1＊	41	MADHT1507	MADHT1507E		Approx. 0.5kVA								DV0PM20042
			400	MSME042□1＊	43	MBDHT2510	MBDHT2510E	B-frame	Approx. 0.9kVA						DV0P4283	DV0P221	
			750	MSME082□1＊	44	MCDHT3520	MCDHT3520E	C-frame	Approx. 1.3kVA								
	MSME 3000r/min	Single phase/ 3-phase 200V	1000	MSME102□1＊	45	MDDHT5540	MDDHT5540E	D-frame	Approx. 1.8kVA	MFECA 0**0ETD	MFECA 0**0ETE	MFMCD 0**2ECD	MFMCA 0**2FCD	—	DV0P4284	DV0P222	DV0P4220
			1500	MSME152□1＊	46	MDDHT5540	MDDHT5540E		Approx. 2.3kVA								
		3-phase 200V	2000	MSME202□1＊	47	MEDHT7364	MEDHT7364E	E-frame	Approx. 3.3kVA						DV0P4285	DV0P223	DV0PM20043
			3000	MSME302□1＊	48	MFDHTA390	MFDHTA390E	F-frame	Approx. 4.5kVA			MFMCA 0**3ECT	MFMCA 0**3FCT		DV0P4285 × 2 in parallel	DV0P224	DV0P3410
			4000	MSME402□1＊	49	MFDHTB3A2	MFDHTB3A2E		Approx. 6kVA							DV0P225	
			5000	MSME502□1＊	50	MFDHTB3A2	MFDHTB3A2E		Approx. 7.5kVA							—	
		3-phase 400V	1000	MSME104□1＊	82	MDDHT3420	MDDHT3420E	D-frame	Approx. 1.8kVA			MFMCD 0**2ECD	MFMCE 0**2FCD		DV0PM20048	—	—
			1500	MSME154□1＊	83	MDDHT3420	MDDHT3420E		Approx. 2.3kVA								
			2000	MSME204□1＊	84	MEDHT4430	MEDHT4430E	E-frame	Approx. 3.3kVA						DV0PM20049		
			3000	MSME304□1＊	85	MFDHT5440	MFDHT5440E	F-frame	Approx. 4.5kVA			MFMCA 0**3ECT	MFMCA 0**3FCT		DV0PM20049 × 2 in parallel		
			4000	MSME404□1＊	86	MFDHTA464	MFDHTA464E		Approx. 6.8kVA								
			5000	MSME504□1＊	87	MFDHTA464	MFDHTA464E		Approx. 7.5kVA								
Middle inertia	MDME 2000r/min	Single phase/ 3-phase 200V	1000	MDME102□1＊	51	MDDHT3530	MDDHT3530E	D-frame	Approx. 1.8kVA	MFECA 0**0ETD	MFECA 0**0ETE	MFMCD 0**2ECD	MFMCA 0**2FCD	—	DV0P4284	DV0P222	DV0P4220
			1500	MDME152□1＊	52	MDDHT5540	MDDHT5540E		Approx. 2.3kVA								
		3-phase 200V	2000	MDME202□1＊	53	MEDHT7364	MEDHT7364E	E-frame	Approx. 3.3kVA						DV0P4285	DV0P223	DV0PM20043
			3000	MDME302□1＊	54	MFDHTA390	MFDHTA390E	F-frame	Approx. 4.5kVA			MFMCA 0**3ECT	MFMCA 0**3FCT		DV0P4285 × 2 in parallel	DV0P224	DV0P3410
			4000	MDME402□1＊	55	MFDHTB3A2	MFDHTB3A2E		Approx. 6kVA							DV0P225	
			5000	MDME502□1＊	56	MFDHTB3A2	MFDHTB3A2E		Approx. 7.5kVA							—	
		3-phase 400V	1000	MDME104□1＊	88	MDDHT2412	MDDHT2412E	D-frame	Approx. 1.8kVA			MFMCD 0**2ECD	MFMCE 0**2FCD		DV0PM20048	—	—
			1500	MDME154□1＊	89	MDDHT3420	MDDHT3420E		Approx. 2.3kVA								
			2000	MDME204□1＊	90	MEDHT4430	MEDHT4430E	E-frame	Approx. 3.3kVA						DV0PM20049		
			3000	MDME304□1＊	91	MFDHT5440	MFDHT5440E	F-frame	Approx. 4.5kVA			MFMCA 0**3ECT	MFMCA 0**3FCT		DV0PM20049 × 2 in parallel		
			4000	MDME404□1＊	92	MFDHTA464	MFDHTA464E		Approx. 6.8kVA								
			5000	MDME504□1＊	93	MFDHTA464	MFDHTA464E		Approx. 7.5kVA								
	MGME 1000r/min	Single phase/ 3-phase 200V	900	MGME092□1＊	57	MDDHT5540	MDDHT5540E	D-frame	Approx. 1.8kVA	MFECA 0**0ETD	MFECA 0**0ETE	MFMCD0**2ECD	MFMCA0**2FCD	—	DV0P4284	DV0P222	DV0P4220
		3-phase 200V	2000	MGME202□1＊	58	MFDHTA390	MFDHTA390E	F-frame	Approx. 3.8kVA			MFMCA 0**3ECT	MFMCA 0**3FCT		DV0P4285 × 2 in parallel	DV0P223	DV0P3410
			3000	MGME302□1＊	59	MFDHTB3A2	MFDHTB3A2E		Approx. 4.5kVA							DV0P224	
		3-phase 400V	900	MGME094□1＊	94	MDDHT3420	MDDHT3420E	D-frame	Approx. 1.8kVA			MFMCD0**2ECD	MFMCE0**2FCD		DV0PM20048	—	—
			2000	MGME204□1＊	95	MFDHT5440	MFDHT5440E	F-frame	Approx. 3.8kVA			MFMCA 0**3ECT	MFMCA 0**3FCT		DV0PM20049 × 2 in parallel		
			3000	MGME304□1＊	96	MFDHTA464	MFDHTA464E		Approx. 4.5kVA								
High inertia	MHMD (Leadwire type) 3000r/min	Single phase 100V	200	MHMD021□1＊	76	MBDHT2110	MBDHT2110E	B-frame	Approx. 0.5kVA	MFECA 0**0EAM	MFECA 0**0EAE	MFMCA 0**0EED	—	MFMCB 0**0GET	DV0P4283	DV0P228	DV0P4170
			400	MHMD041□1＊	78	MCDHT3120	MCDHT3120E	C-frame	Approx. 0.9kVA						DV0P4282		DV0PM20042
		Single phase/ 3-phase 200V	200	MHMD022□1＊	77	MADHT1507	MADHT1507E	A-frame	Approx. 0.5kVA						DV0P4283	DV0P220	DV0PM20042
			400	MHMD042□1＊	79	MBDHT2510	MBDHT2510E	B-frame	Approx. 0.9kVA							DV0P221	
			750	MHMD082□1＊	80	MCDHT3520	MCDHT3520E	C-frame	Approx. 1.3kVA								
	MHME 2000r/min	Single phase/ 3-phase 200V	1000	MHME102□1＊	60	MDDHT3530	MDDHT3530E	D-frame	Approx. 1.8kVA	MFECA 0**0ETD	MFECA 0**0ETE	MFMCD 0**2ECD	MFMCA 0**2FCD	—	DV0P4284	DV0P222	DV0P4220
			1500	MHME152□1＊	61	MDDHT5540	MDDHT5540E		Approx. 2.3kVA								
		3-phase 200V	2000	MHME202□1＊	62	MEDHT7364	MEDHT7364E	E-frame	Approx. 3.3kVA			MFMCE0**2ECD	MFMCE0**2FCD		DV0P4285	DV0P223	DV0PM20043
			3000	MHME302□1＊	63	MFDHTA390	MFDHTA390E	F-frame	Approx. 4.5kVA			MFMCA 0**3ECT	MFMCA 0**3FCT		DV0P4285 × 2 in parallel	DV0P224	DV0P3410
			4000	MHME402□1＊	64	MFDHTB3A2	MFDHTB3A2E		Approx. 6kVA							DV0P225	
			5000	MHME502□1＊	65	MFDHTB3A2	MFDHTB3A2E		Approx. 7.5kVA							—	
		3-phase 400V	1000	MHME104□1＊	98	MDDHT2412	MDDHT2412E	D-frame	Approx. 1.8kVA			MFMCD 0**2ECD	MFMCE 0**2FCD		DV0PM20048	—	—
			1500	MHME154□1＊	99	MDDHT3420	MDDHT3420E		Approx. 2.3kVA								
			2000	MHME204□1＊	100	MEDHT4430	MEDHT4430E	E-frame	Approx. 3.3kVA			MFMCE0**2ECD			DV0PM20048		
			3000	MHME304□1＊	101	MFDHT5440	MFDHT5440E	F-frame	Approx. 4.5kVA			MFMCA 0**3ECT	MFMCA 0**3FCT		DV0PM20049 × 2 in parallel		
			4000	MHME404□1＊	102	MFDHTA464	MFDHTA464E		Approx. 6.8kVA								
			5000	MHME504□1＊	103	MFDHTA464	MFDHTA464E		Approx. 7.5kVA								

note)1 Rotary encoder specifications: □ Motor specification: ＊ (refer to P.13)

note)2 Cable length: ** (03: 3m, 05: 5m, 10: 10m, 20: 20m)

• Options

Title	構成品名	Part No.	Page
Interface cable		DV0P4360	118
Interface Connector		DV0P4350	118
Connector for Power Supply Input Connection	A to D-frame (100V/200V) Single row type	DV0PM20032	120
	A to D-frame (100V/200V) Double row type	DV0PM20033	120
	E-frame (200V)	DV0PM20044	120
	D-frame (400V)	DV0PM20051	121
	E-frame (400V)	DV0PM20052	121
Connector for Control Power Supply Input Connection	D, E-frame (400V)	DV0PM20053	121
Connector for Motor Connection	A to D-frame	DV0PM20034	121
	E-frame (200V)	DV0PM20046	122
	D-frame (400V)	DV0PM20054	122
Connector for Regenerative Resistor	E-frame	DV0PM20045	121
	D-frame (400V)	DV0PM20055	121
Connector Kit for Motor/Encoder Connection		DV0P4290	122
		DV0P4380	122
		DV0PM20035	123
		DV0PM20036	123
		DV0PM20037	123
		DV0PM20038	124
		DV0PM20039	124
Connector Kit for Motor/Brake Connection		DV0PM20040	124
Connector	RS485, RS232	DV0PM20024	119
	Safety	DV0PM20025	119
	External Scale	DV0PM20026	119
	Encoder	DV0PM20010	119
	Analog Monitor Signal	DV0PM20031	120
Battery For Absolute Encoder		DV0P2990	125
Battery Box		DV0P4430	125
Mounting bracket	A-frame	DV0PM20027	126
	B-frame	DV0PM20028	126
	C-frame	DV0PM20029	126
	D-frame	DV0PM20030	126
Junction Cable for Encoder	without Buttery Box	MFECA0**0EAM	112
		MFECA0**0MJD	112
		MFECA0**0ETD	113
	with Buttery Box	MFECA0**0EAE	112
		MFECA0**0MJE	113
		MFECA0**0ETE	113
Junction Cable for Motor	without Brake	MFMCA0**0EED	114
		MFMCA0**0NJD	114
		MFMCD0**2ECD	114
		MFMCE0**2ECD	115
		MFMCA0**3ECT	115
	with Brake	MFMCA0**2FCD	116
		MFMCE0**2FCD	116
		MFMCA0**3FCT	116
Junction Cable for Brake		MFMCB0**0GET	117
		MFMCB0**0PJT	117
External Regenerative Resistor	50Ω 25W	DV0P4280	128
	100Ω 25W	DV0P4281	128
	25Ω 50W	DV0P4282	128
	50Ω 50W	DV0P4283	128
	30Ω 100W	DV0P4284	128
	20Ω 130W	DV0P4285	128
	120Ω 35W	DV0PM20048	128
	80Ω 65W	DV0PM20049	128
Reactor	DV0P220, DV0P221, DV0P222, DV0P223, DV0P224, DV0P225, DV0P227, DV0P228		127
Noise Filter	DV0P4170, DV0PM20042 DV0P4220, DV0PM20043 DV0P3410		108
Surge absorber	Single phase	DV0P4190	109
	3-phase (200V)	DV0P1450	109
	3-phase (400V)	DV0PM20050	109
Noise Filter for Signal Lines		DV0P1460	109

A5 series (Standard type)

Basic Specifications	Input power	100V	Main circuit		Single phase, 100 to 120V +10% –15% 50/60Hz
			Control circuit		Single phase, 100 to 120V +10% –15% 50/60Hz
		200V	Main circuit	A to D-frame	Single/3-phase, 200 to 240V +10% –15% 50/60Hz
				E to F-frame	3-phase, 200 to 230V +10% –15% 50/60Hz
			Control circuit	A to D-frame	Single phase, 200 to 240V +10% –15% 50/60Hz
				E to F-frame	Single phase, 200 to 230V +10% –15% 50/60Hz
		400V	Main circuit	D to F-frame	Single phase, 380 to 480V +10% –15% 50/60Hz
			Control circuit	D to F-frame	DC 24V ± 15%
	Withstand voltage				Primary to earth: withstand 1500 VAC, 1 min,(sensed current: 20 mA)
	Environment		temperature		Ambient temperature: 0˚C to 55˚C (free from freezing) Storage temperature: –20˚C to 65˚C (Max.temperature guarantee: 80˚C for 72 hours)
			humidity		Both operating and storage : 20 to 85%RH or less (free from condensation)
			Altitude		Lower than 1000m
			Vibration		5.88m/s^2 or less, 10 to 60Hz (No continuous use at resonance frequency)
	Control method				IGBT PWM Sinusoidal wave drive
	Encoder feedback				17-bit (131072 resolution) absolute encoder, 7-wire serial 20-bit (1048576 resolution) incremental encoder, 5-wire serial
	Feedback scale feedback				A/B phase, initialization signal defferential input. Manufacturers that support serial communication scale: Mitsutoyo Corp. Sony Manufacturing Systems Corp.
	Control signal		Input		General purpose 10 inputs The function of general-purpose input is selected by parameters.
			Output		General purpose 6 outputs The function of general-purpose input is selected by parameters.
	Analog /Digital signal		Input		3 inputs (16Bit A/D : 1 input, 12Bit A/D : 2 inputs)
			Output		3 outputs (Analog monitor: 2 output, Digital monitor: 1 output)
	Pulse signal		Input		2 inputs (Photo-coupler input, Line receiver input) Photocoupler input is compatible with both line driver I/F and open collector I/F. Line receiver input is compatible with line driver I/F.
			Output		4 outputs (Line driver: 3 output, open collector: 1 output) Feed out the encoder pulse (A, B and Z-phase) or feedback scale pulse (EXA, EXB and EXZ-phase) in line driver. Z-phase and EXZ-phase pulse is also fed out in open collector.
	Communication function		USB		Connection with PC etc.
			RS232		1 : 1 communication to a host with RS23 interface is enabled.
			RS485		1 : n communication up to 15 axes to a host with RS485 interface is enabled.
	Safety function				Used for IEC61800-5-2: STO.
	Front panel				(1) 5 keys (MODE, SET, UP, DOWN, SHIFT) (2) LED (6-digit) (3) Analog monitor output (2ch) (4) Digital monitor output (1ch)
	Regeneration				A, B-frame: no built-in regenerative resistor (external resistor only) C to F-frame: Built-in regenerative resistor (external resistor is also enabled.)
	Dynamic brake				Built-in
	Control mode				Switching among the following 7 mode is enabled, (1) Position control (2) Velocity control (3) Toque control (4) Position/Velocity control (5) Position/Torque control (6) Velocity/Torque control (7) Full-closed control

Function	Position control	Control input	(1) Deviation counter clear (2) Command pulse inhibition (3) Command dividing gradual increase switching (4) Damping control switching etc.
		Control output	Positioning complete (In-position) etc.
		Pulse input: Max. command pulse frequency	Exclusive interface for Photo-coupler: 500kpps Exclusive interface for line driver : 4Mpps
		Pulse input: Input pulse signal format	Differential input. Selectable with parameter. ((1) Positive and Negative direction, (2) A and B-phase, (3) Command and direction)
		Pulse input: Electronic gear (Division/ Multiplication of command pulse)	Process command pulse frequency × electronic gear ratio $\left(\frac{1 \text{ to } 2^{30}}{1 \text{ to } 2^{30}}\right)$ as positional command input. Use electronic gear ratio in the range 1/1000 to 1000 times.
		Pulse input: Smoothing filter	Primary delay filter or FIR type filter is adaptable to the command input
		Analog input: Torque limit command input	Individual torque limit for both positive and negative direction is enabled. (3V/rated torque)
		Instantaneous Speed Observer	Available
		Damping Control	Available
	Velocity control	Control input	(1) Selection of internal velocity setup 1 (2) Selection of internal velocity setup 2 (3) Selection of internal velocity setup 3 (4) Speed zero clamp etc.
		Control output	Speed arrival etc.
		Analog input: Velocity command input	Speed command input can be provided by means of analog voltage. Parameters are used for scale setting and command polarity.
		Analog input: Torque limit command input	Individual torque limit for both positive and negative direction is enabled. (3V/rated torque)
		Internal velocity command	Switching the internal 8speed is enabled by command input.
		Soft-start/down function	Individual setup of acceleration and deceleration is enabled, with 0 to 10s/1000r/min. Sigmoid acceleration/deceleration is also enabled.
		Zero-speed clamp	0-clamp of internal velocity command with speed zero clamp input is enabled.
		Instantaneous Speed Observer	Available
		Velocity Control filter	Available
	Torque control	Control input	Speed zero clamp, Torque command sign input etc.
		Control output	Speed arrival etc.
		Analog input: Torque command input	Speed command input can be provided by means of analog voltage. Parameters are used for scale setting and command polarity.
		Speed limit function	Speed limit value with parameter t is enabled.
	Full-closed control	Control input	(1) Deviation counter clear (2) Command pulse inhibition (3) Command dividing gradual increase switching (4) Damping control switching etc.
		Control output	Full-closed positioning complete etc.
		Pulse input: Max. command pulse frequency	Exclusive interface for Photo-coupler: 500kpps Exclusive interface for line driver : 4Mpps
		Pulse input: Input pulse signal format	Differential input. Selectable with parameter. ((1) Positive and Negative direction, (2) A and B-phase, (3) Command and direction)
		Pulse input: Electronic gear (Division/ Multiplication of command pulse)	Process command pulse frequency × electronic gear ratio $\left(\frac{1 \text{ to } 2^{30}}{1 \text{ to } 2^{30}}\right)$ as positional command input. Use electronic gear ratio in the range 1/1000 to 1000 times.
		Pulse input: Smoothing filter	Primary delay filter or FIR type filter is adaptable to the command input
		Analog input: Torque limit command input	Individual torque limit for both positive and negative direction is enabled. (3V/rated torque)
		Setup range of division/ multiplication of feedback scale	1/40 to 160 times The ratio of encoder pulse (numerator) to external scale pulse (denominator) can be set to 1 to 2^{20} (numerator) to 1 to 2^{20} (denominator), but should be set to a ratio within the range shown above.
	Common	Auto tuning	The load inertia is identified in real time by the driving state of the motor operating according to the command given by the controlling device and set up support software "PANATERM". The gain is set automatically in accordance with the rigidity setting.
		Division of encoder feedback pulse	Set up of any value is enabled (encoder pulses count is the max.).
		Protective function: Hard error	Over-voltage, under-voltage, over-speed, over-load, over-heat, over-current and encoder error etc.
		Protective function: Soft error	Excess position deviation, command pulse division error, EEPROM error etc.
		Traceability of alarm data	The alarm data history can be referred to.

A5E series (Positioning type)

Basic Specifications	Input power	100V	Main circuit		Single phase, 100 to 120V +10% –15% 50/60Hz
			Control circuit		Single phase, 100 to 120V +10% –15% 50/60Hz
		200V	Main circuit	A to D-frame	Single/3-phase, 200 to 240V +10% –15% 50/60Hz
				E to F-frame	3-phase, 200 to 230V +10% –15% 50/60Hz
			Control circuit	A to D-frame	Single phase, 200 to 240V +10% –15% 50/60Hz
				E to F-frame	Single phase, 200 to 230V +10% –15% 50/60Hz
		400V	Main circuit	D to F-frame	Single phase, 380 to 480V +10% –15% 50/60Hz
			Control circuit	D to F-frame	DC 24V ± 15%
	Withstand voltage				Primary to earth: withstand 1500 VAC, 1 min,(sensed current: 20 mA)
	Environment		temperature		Ambient temperature: 0˚C to 55˚C (free from freezing) Storage temperature: –20˚C to 65˚C (Max.temperature guarantee: 80˚C for 72 hours)
			humidity		Both operating and storage : 20 to 85%RH or less (free from condensation)
			Altitude		Lower than 1000m
			Vibration		5.88m/s^2 or less, 10 to 60Hz (No continuous use at resonance frequency)
	Control method				IGBT PWM Sinusoidal wave drive
	Encoder feedback				17-bit (131072 resolution) absolute encoder, 7-wire serial 20-bit (1048576 resolution) incremental encoder, 5-wire serial
	Control signal		Input		General purpose 10 inputs The function of general-purpose input is selected by parameters.
			Output		General purpose 6 outputs The function of general-purpose input is selected by parameters.
	Analog /Digital signal		Input		3 inputs (16Bit A/D : 1 input, 12Bit A/D : 2 inputs)
			Output		3 outputs (Analog monitor: 2 output, Digital monitor: 1 output)
	Pulse signal		Input		2 inputs (Photo-coupler input, Line receiver input) Photocoupler input is compatible with both line driver I/F and open collector I/F. Line receiver input is compatible with line driver I/F.
			Output		4 outputs (Line driver: 3 output, open collector: 1 output) Feed out the encoder pulse (A, B and Z-phase) or feedback scale pulse (EXA, EXB and EXZ-phase) in line driver. Z-phase and EXZ-phase pulse is also fed out in open collector.
	Communication function		USB		Connection with PC etc.
	Safety function				Used for IEC61800-5-2: STO.
	Front panel				(1) 5 keys (MODE, SET, UP, DOWN, SHIFT) (2) LED (6-digit) (3) Analog monitor output (2ch) (4) Digital monitor output (1ch)
	Regeneration				A, B-frame: no built-in regenerative resistor (external resistor only) C to F-frame: Built-in regenerative resistor (external resistor is also enabled.)
	Dynamic brake				Built-in
	Control mode				Position control

Function	Position control	Control input		(1) Deviation counter clear (2) Command pulse inhibition (3) Command dividing gradual increase switching (4) Damping control switching etc.
		Control output		Positioning complete (In-position) etc.
		Pulse input	Max. command pulse frequency	Exclusive interface for Photo-coupler: 500kpps Exclusive interface for line driver : 4Mpps
			Input pulse signal format	Differential input. Selectable with parameter. ((1) Positive and Negative direction, (2) A and B-phase, (3) Command and direction)
			Electronic gear (Division/ Multiplication of command pulse)	Process command pulse frequency × electronic gear ratio $\left(\frac{1 \text{ to } 2^{30}}{1 \text{ to } 2^{30}}\right)$ as positional command input. Use electronic gear ratio in the range 1/1000 to 1000 times.
			Smoothing filter	Primary delay filter or FIR type filter is adaptable to the command input
		Instantaneous Speed Observer		Available
		Damping Control		Available
	Common	Auto tuning		The load inertia is identified in real time by the driving state of the motor operating according to the command given by the controlling device and set up support software “PANATERM”. The gain is set automatically in accordance with the rigidity setting.
		Division of encoder feedback pulse		Set up of any value is enabled (encoder pulses count is the max.).
		Protective function	Hard error	Over-voltage, under-voltage, over-speed, over-load, over-heat, over-current and encoder error etc.
			Soft error	Excess position deviation, command pulse division error, EEPROM error etc.
		Traceability of alarm data		The alarm data history can be referred to.

Wiring to Connector, XA, XB, XC, XD

In Case of Single Phase, A to D-frame, 100 V / 200 V type and 3-Phase, A to D-frame, 200 V type

• MSMD, MHMD モータの場合

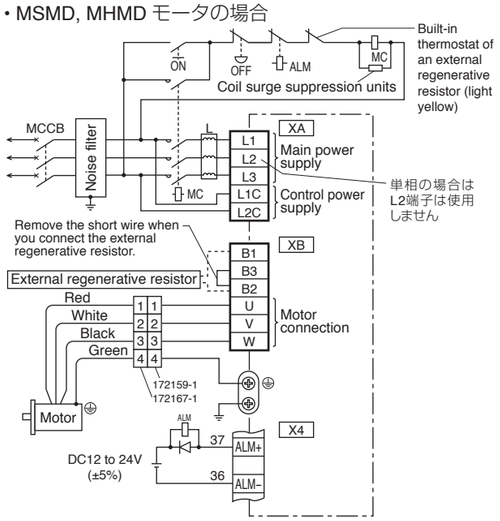

• MSME モータの場合

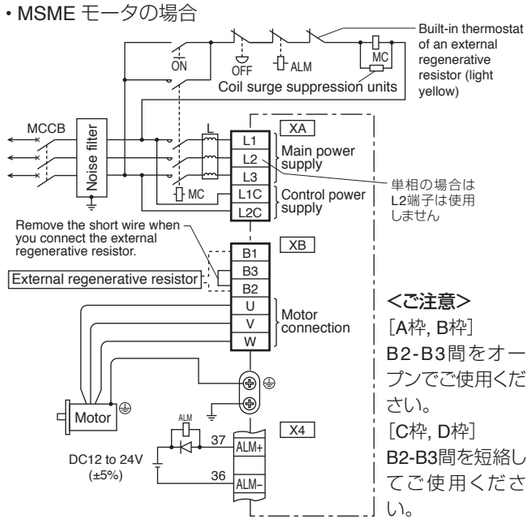

<ご注意>
[A枠, B枠]
B2-B3間をオープンでご使用ください。
[C枠, D枠]
B2-B3間を短絡してご使用ください。

In Case of 3-Phase, D-frame, 400 V type

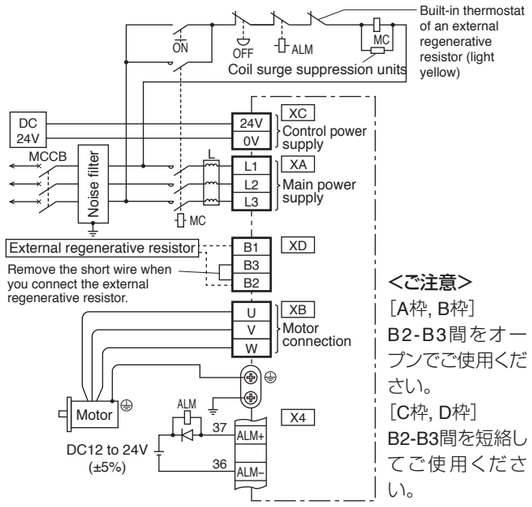

<ご注意>
[A枠, B枠]
B2-B3間をオープンでご使用ください。
[C枠, D枠]
B2-B3間を短絡してご使用ください。

In Case of 3-Phase, E-frame, 200 V type

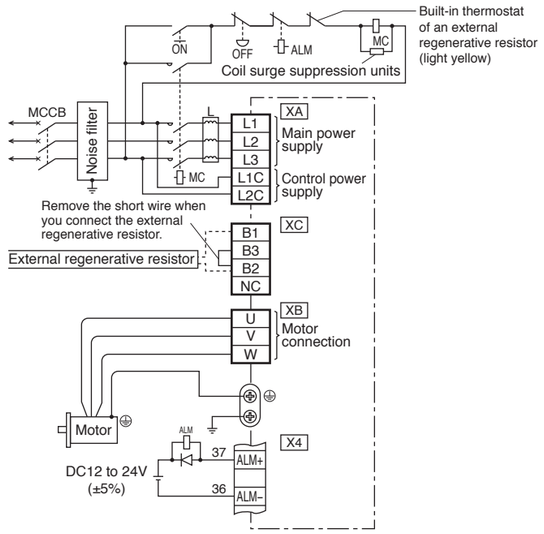

In Case of 3-Phase, E-frame, 400 V type

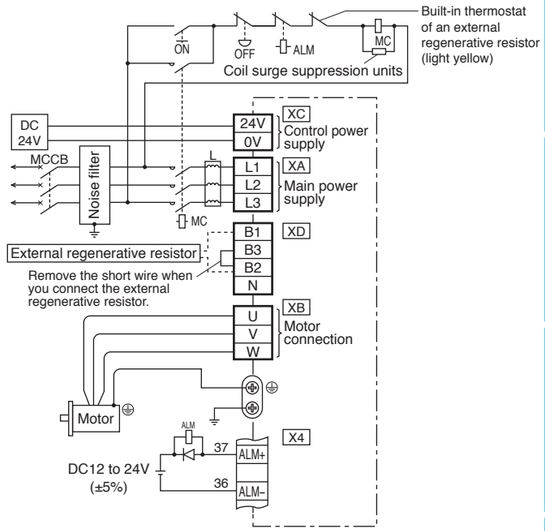

In Case of 3-Phase, F-frame, 200 V type

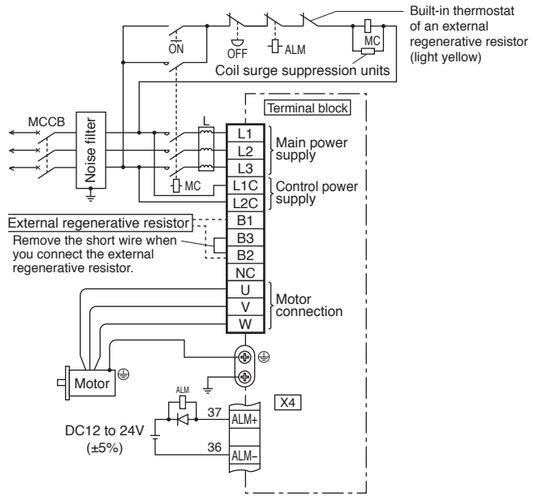

In Case of 3-Phase, F-frame, 400 V type

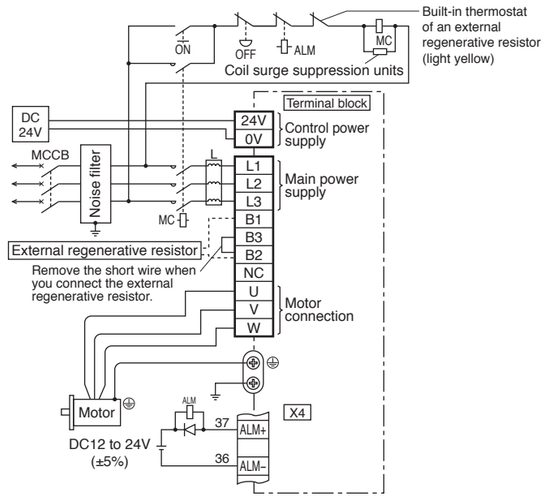

Specifications of Motor connector (The figures show connectors for the motor.)

• When the motors of <MSMD, MHMD> are used, they are connected as shown below.
Connector: Made by Tyco Electronics AMP

<Motor>

172167-1

PIN No.	Application
1	U-phase
2	V-phase
3	W-phase
4	Ground

<Brake>

172165-1

PIN No.	Application
1	Brake
2	Brake

• When the motors of <MSME (50 W to 750 W)> are used, they are connected as shown below.
Connector: Made by Japan Aviation Electronics Industry, Ltd.

<Motor>

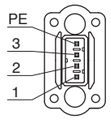

JN8AT04NJ1

PIN No.	Application
1	U-phase
2	V-phase
3	W-phase
PE	Ground

Tightening torque of the screw (M2) 0.085 to 0.095 N·m (screwed to plastic)

<Brake>

JN4AT02PJM-R

PIN No.	Application
1	Brake
2	Brake

Tightening torque of the screw(M2) 0.19 to 0.21 N·m

* Be sure to use only the screw supplied with the connector, to avoid damage.

• When the motors of <MSME (1.0 kW to 5.0 kW), MDME, MGME, MHME> are used, they are connected as shown below.
Connector: Made by Japan Aviation Electronics Industry, Ltd.

* For detail of Applicable model, refer to P.111 "Specifications of Motor connector".

<without Brake>

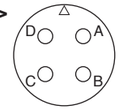

JL04V-2E20-4PE-B-R
JL04HV-2E22-22PE-B-R

PIN No.	Application
A	U-phase
B	V-phase
C	W-phase
D	Ground

<with Brake>

JL04V-2E20-18PE-B-R

PIN No.	Application
G	Brake
H	Brake
A	NC
F	U-phase
I	V-phase
B	W-phase
E	Ground
D	Ground
C	NC

JL04V-2E24-11PE-B-R

PIN No.	Application
A	Brake
B	Brake
C	NC
D	U-phase
E	V-phase
F	W-phase
G	Ground
H	Ground
I	NC

<Remarks> Do not connect anything to NC.

Safety function　Wiring to the connector, X3 (Excluding A5E Series)

上位コントローラを接続して、セーフティ機能をコントロールするセーフティ回路を構築することができます。
セーフティ回路を構築しない場合は、付属のセーフティバイパスプラグをご使用ください。

Outline description of safe torque off (STO)

The safe torque off (STO) function is a safety function that shuts the motor current and turns off motor output torque by forcibly turning off the driving signal of the servo driver internal power transistor. For this purpose, the STO uses safety input signal and hardware (circuit).
When STO function operates, the servo driver turns off the servo ready output signal (S-RDY) and enters safety state.
This is an alarm condition and the 7-seg LED on the front panel displays the error code number.

Safety precautions

- When using the STO function, be sure to perform equipment risk assessment to ensure that the system conforms to the safety requirements.
- Even while the STO function is working, the following potential safety hazards exist. Check safety in risk assessment.
  - The motor may move when eternal force (e.g. gravity force on vertical axis) is exerted on it. Provide an external brake, etc., as necessary to secure the motor. Note that the purpose of motor with brake is holding and it cannot be used for braking application.
  - When parameter Pr5.10 Sequence at alarm is set to free run (disable dynamic brake), the motor is free run state and requires longer stop distance even if no external force is applied. Make sure that this does not cause any problem.
  - When power transistor, etc., becomes defective, the motor will move to the extent equivalent of 180 electrical angle (max.). Make sure that this does not cause any problem.
  - The STO turns off the current to the motor but does not turn off power to the servo driver and does not isolate it. When starting maintenance service on the servo driver, turn off the driver by using a different disconnecting device.
- External device monitor (hereafter EDM) output signal is not a safety signal. Do not use it for an application other than failure monitoring.
- Dynamic brake and external brake release signal output are not related to safety function. When designing the system, make sure that the failure of external brake release during STO condition does not result in danger condition.
- When using STO function, connect equipment conforming to the safety standards.

[Connector pin assignment]
(Viewed from cable)

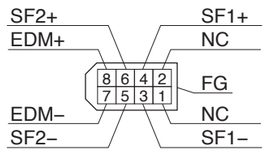

- System configuration

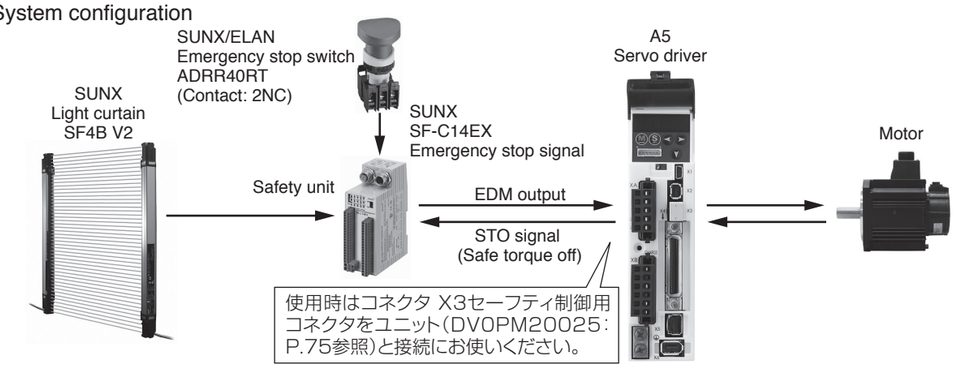

Control Circuit Diagram　Wiring to the connector, X4

Wiring Example of Position Control Mode

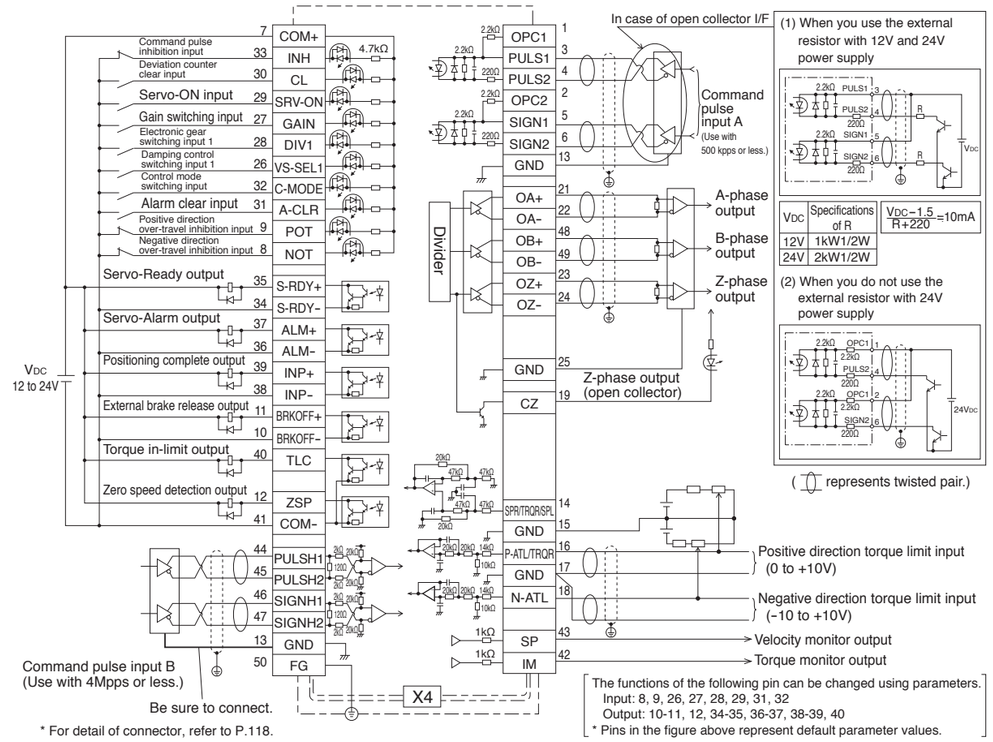

* For detail of connector, refer to P.118.

Wiring Example of Velocity Control Mode (Excluding A5E Series)

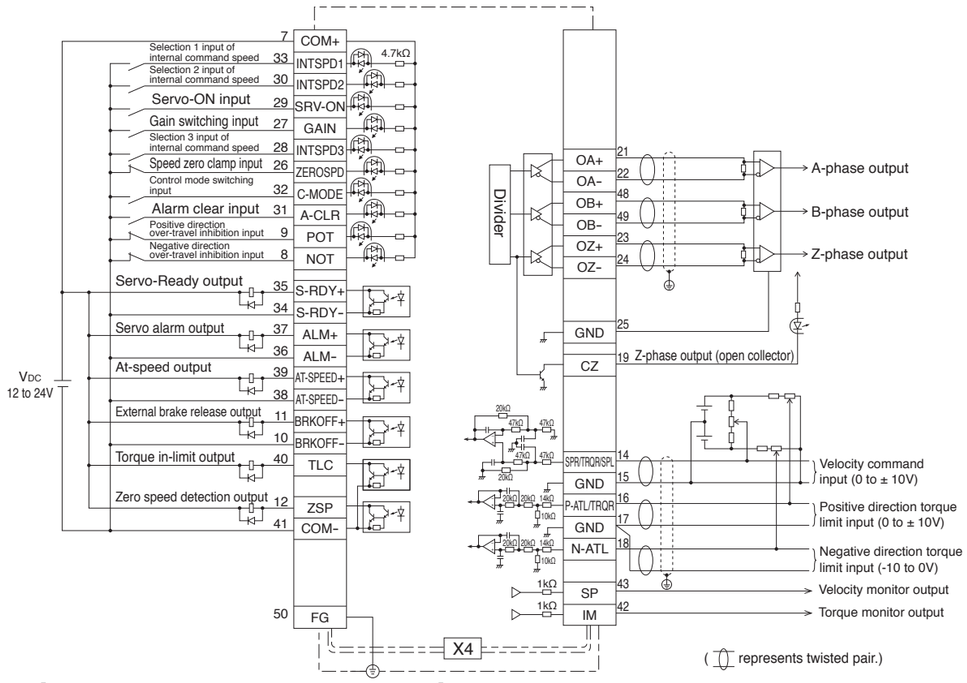

* For detail of connector, refer to P.118.

Wiring to the connector, X4

Wiring Example of Torque Control Mode (Excluding A5E Series)

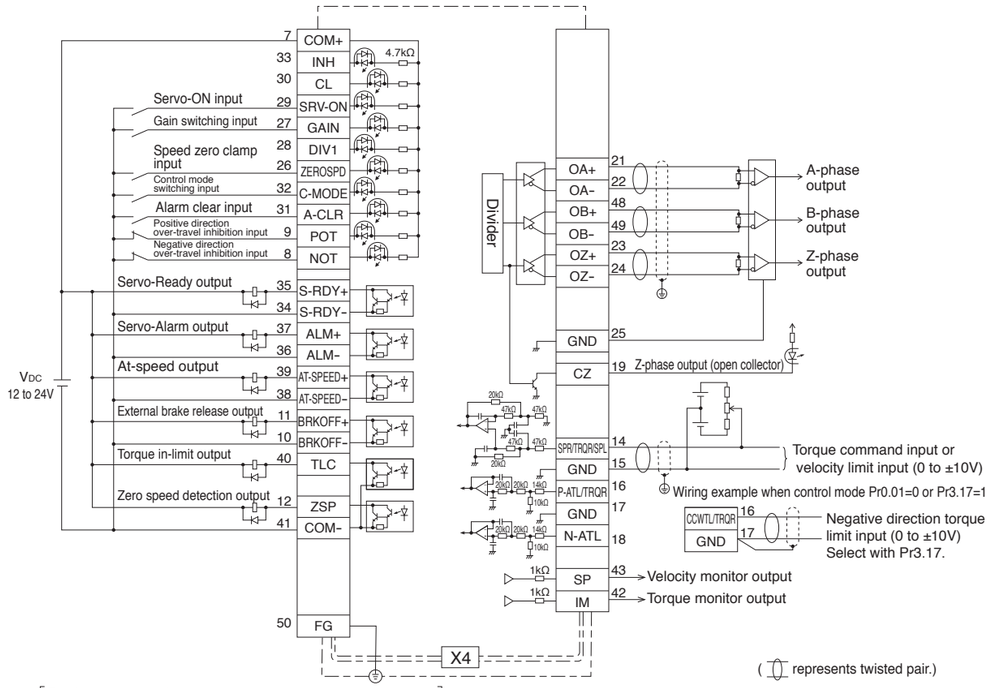

The functions of the following pin can be changed using parameters.
Input: 8, 9, 26, 27, 28, 29, 30, 31, 32, 33
Output: 10-11, 12, 34-35, 36-37, 38-39, 40
* Pins in the figure above represent default parameter values.

* For detail of connector, refer to P.118.

Wiring Example of Full-closed Control Mode (Excluding A5E Series)

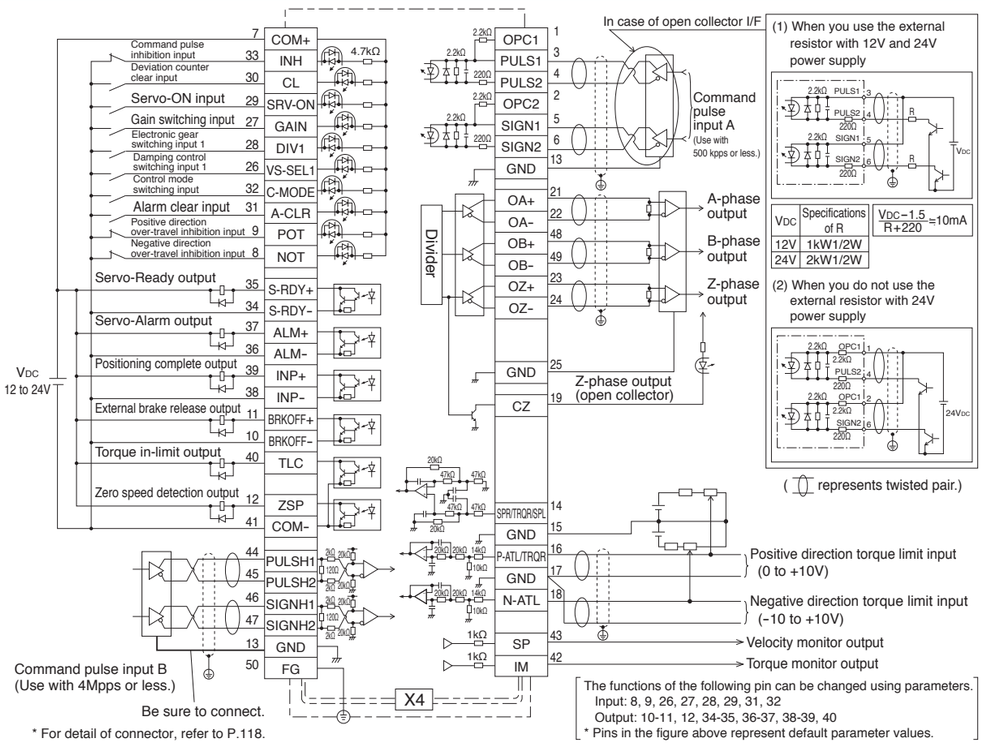

The functions of the following pin can be changed using parameters.
Input: 8, 9, 26, 27, 28, 29, 31, 32
Output: 10-11, 12, 34-35, 36-37, 38-39, 40
* Pins in the figure above represent default parameter values.

* For detail of connector, refer to P.118.

Wiring to the connector, X5 (Excluding A5E Series)

Applicable external scale

The manufacturers applicable external scales for this product are as follows.

- Mitutoyo Corp.
  ST771A(L), ST773A(L), AT573A
- Sony Manufacturing Systems Corp.
  SR75, SR85, SR77, SR87, SL700・PL101-RP, SL710・PL101-RP

* For the details of the external scale product, contact each company.

Wiring Diagram of X5

<A/B-phase>

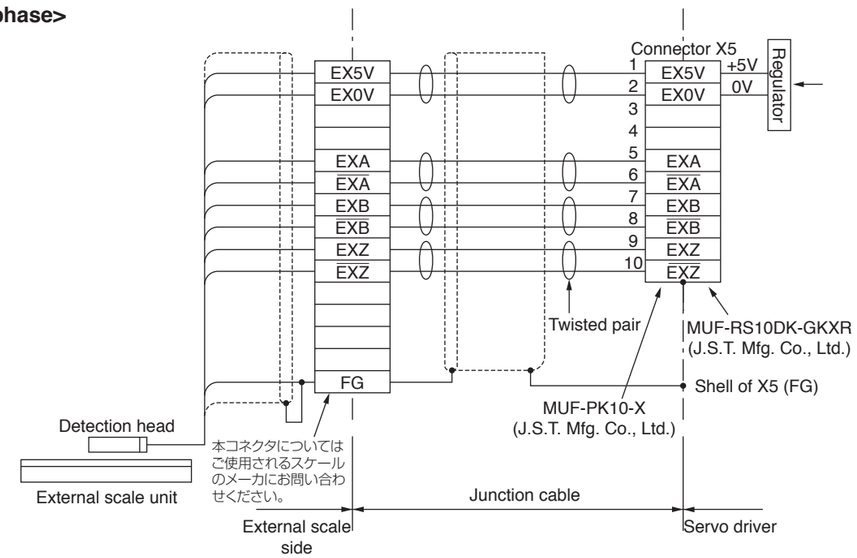

<Serial>

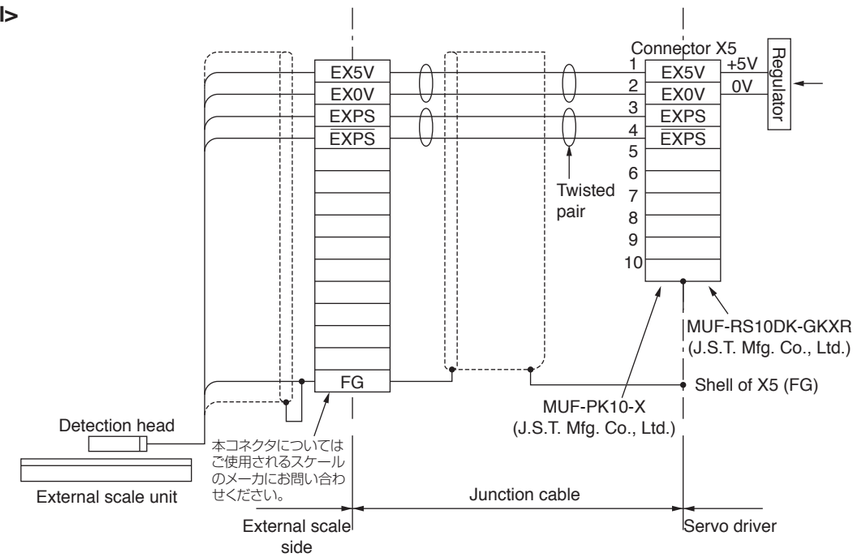

Wiring to the connector, X6

In case of 20-bit incremental encoder

MSMD 50W to 750W, MHMD 200W to 750W

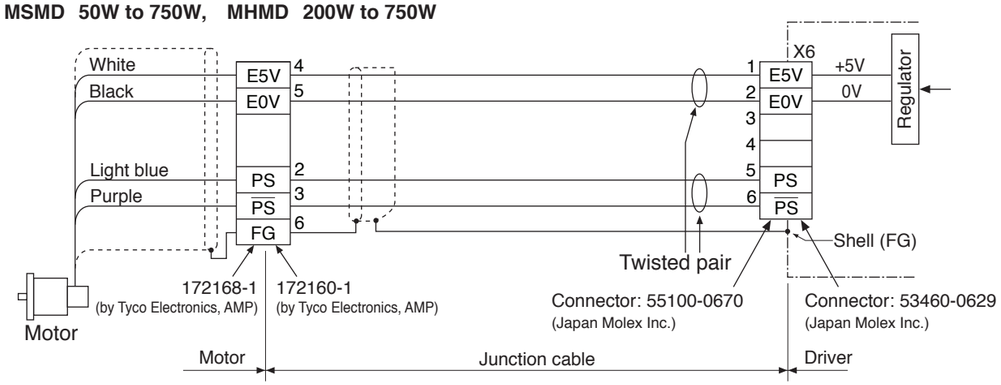

MSME 50W to 750W

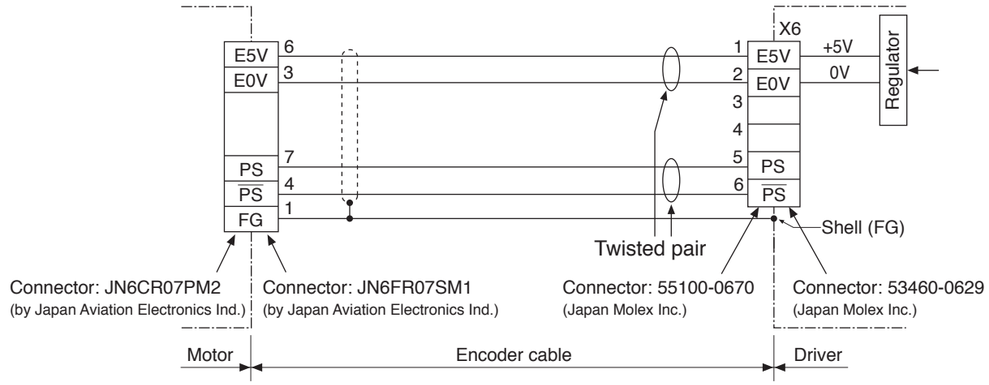

Tighten the motor connector mounting screw (M2) with a torque between 0.19 and 0.21 N·m. To avoid damage, be sure to use only the screw supplied with the connector.

[Connector pin assignment (Motor side)]

(Viewed from cable)

MSME 1.0kW to 5.0kW, MDME 1.0kW to 5.0kW
MHME 1.0kW to 5.0kW, MGME 0.9kW to 3.0kW

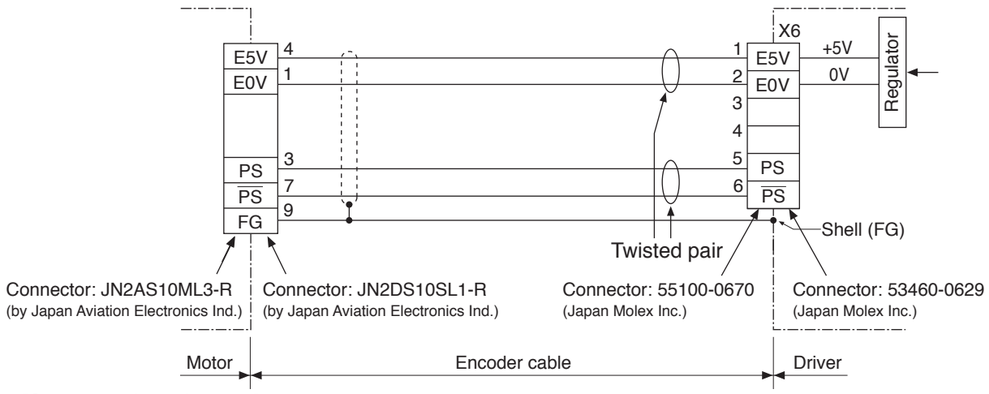

[Connector pin assignment]

Refer to P.111 “Specifications of Motor connector”.

In case of 17-bit absolute encoder

MSMD 50W to 750W, MHMD 200W to 750W

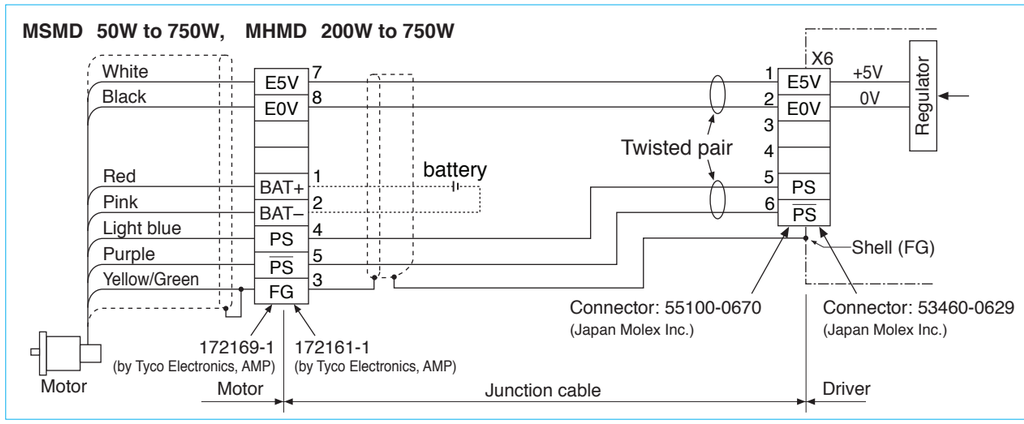

MSME 50W to 750W

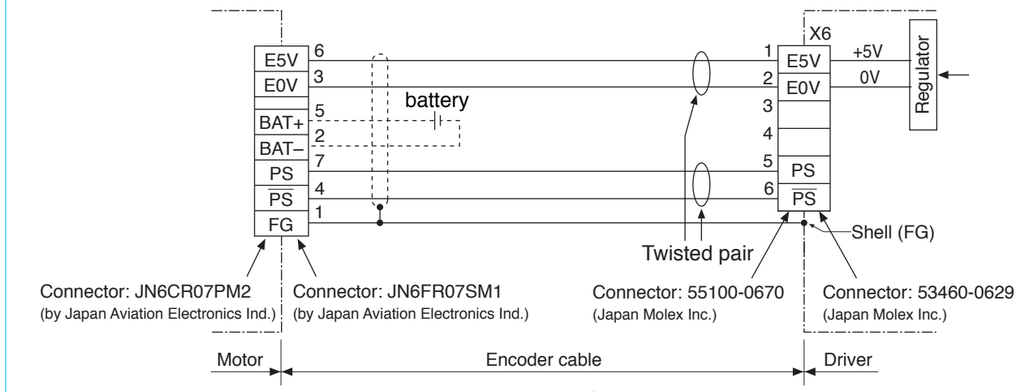

Tighten the motor connector mounting screw (M2) with a torque between 0.19 and 0.21 N·m. To avoid damage, be sure to use only the screw supplied with the connector.

[Connector pin assignment (Motor side)]

(Viewed from cable)

MSME 1.0kW to 5.0kW, MDME 1.0kW to 5.0kW
MHME 1.0kW to 5.0kW, MGME 0.9kW to 3.0kW

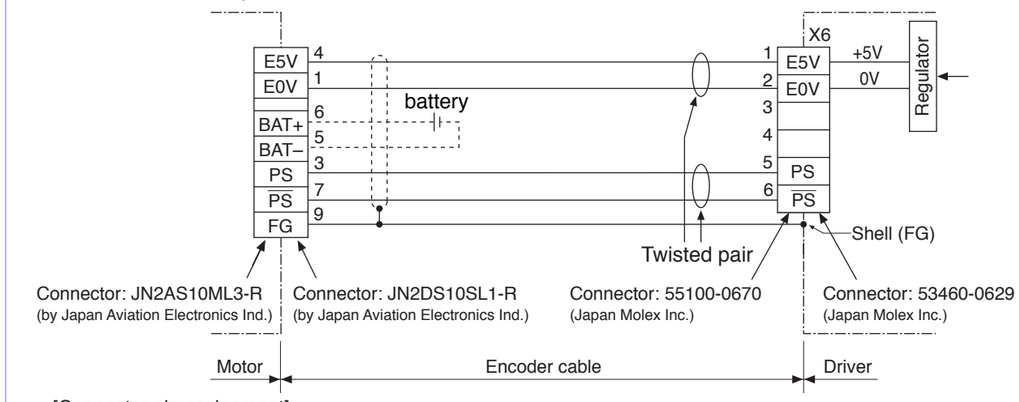

[Connector pin assignment]

Refer to P.111 “Specifications of Motor connector”.

A-frame

Unit [mm]

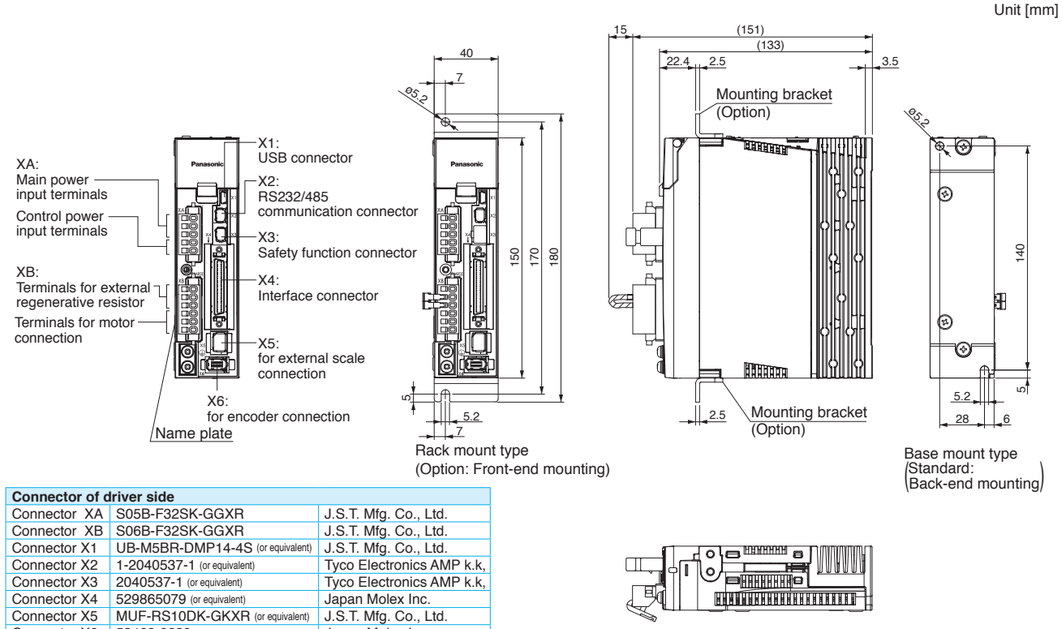

Connector of driver side		
Connector XA	S05B-F32SK-GGXR	J.S.T. Mfg. Co., Ltd.
Connector XB	S06B-F32SK-GGXR	J.S.T. Mfg. Co., Ltd.
Connector X1	UB-M5BR-DMP14-4S (or equivalent)	J.S.T. Mfg. Co., Ltd.
Connector X2	1-2040537-1 (or equivalent)	Tyco Electronics AMP k.k,
Connector X3	2040537-1 (or equivalent)	Tyco Electronics AMP k.k,
Connector X4	529865079 (or equivalent)	Japan Molex Inc.
Connector X5	MUF-RS10DK-GKXR (or equivalent)	J.S.T. Mfg. Co., Ltd.
Connector X6	53460-0629 (or equivalent)	Japan Molex Inc.
Connector X7	530140610 (or equivalent)	Japan Molex Inc.
Connector of power and motor side（アンプ本体に同梱）		
Connector XA	05JFAT-SAXGF	J.S.T. Mfg. Co., Ltd.
Connector XB	06JFAT-SAXGF	J.S.T. Mfg. Co., Ltd.

Mass: 0.8kg

B-frame

Unit [mm]

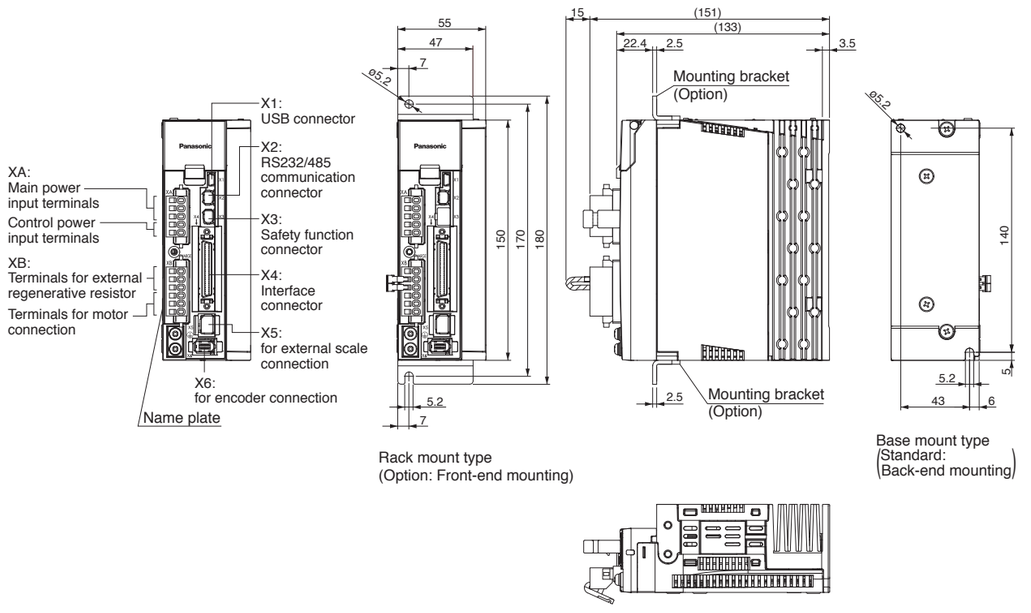

※アンプ側コネクタ及び電源側、モータ側コネクタは
A 枠と同じですので、A 枠の表をご覧ください。

Mass: 1.0kg

C-frame

Unit [mm]

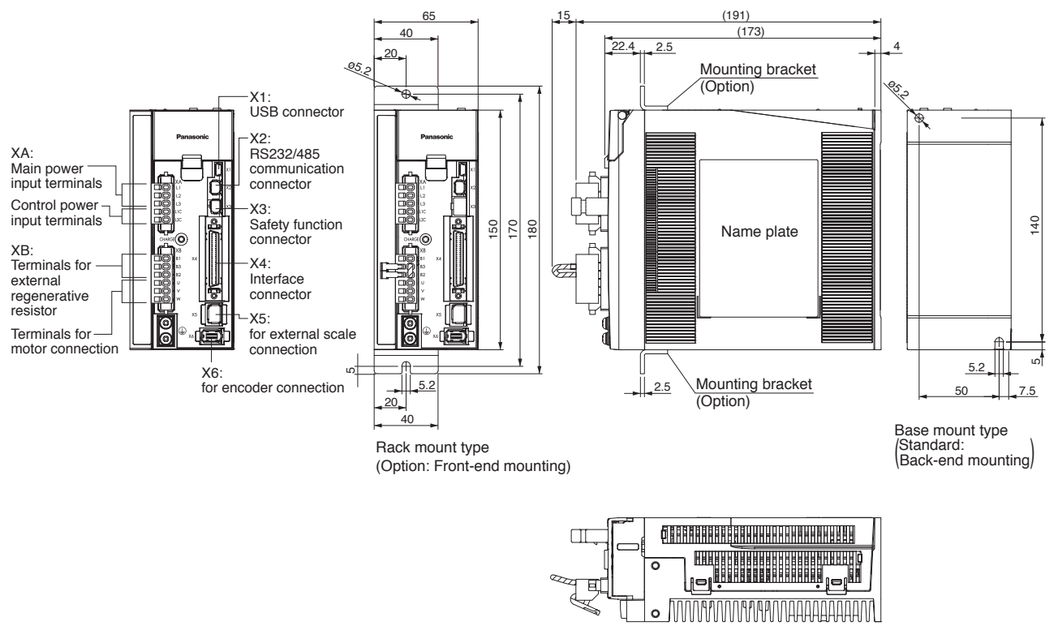

※アンプ側コネクタ及び電源側、モータ側コネクタは
A 枠と同じですので、A 枠の表をご覧ください。

Mass: 1.6kg

D-frame (200V)

Unit [mm]

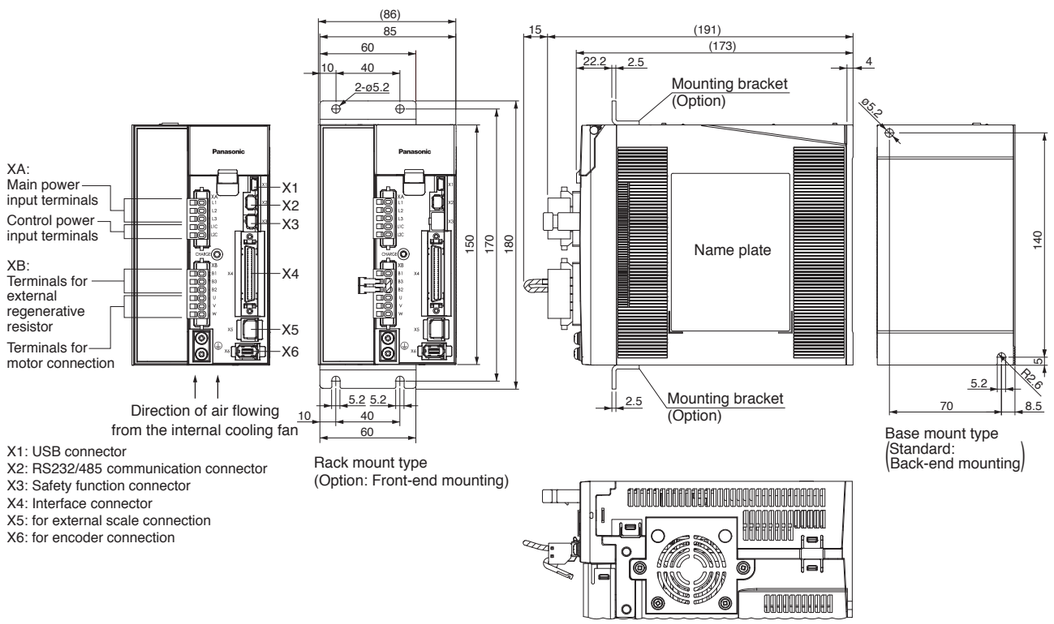

※アンプ側コネクタ及び電源側、モータ側コネクタは
A 枠と同じですので、A 枠の表をご覧ください。

Mass: 1.8kg

E-frame (200V)

Unit [mm]

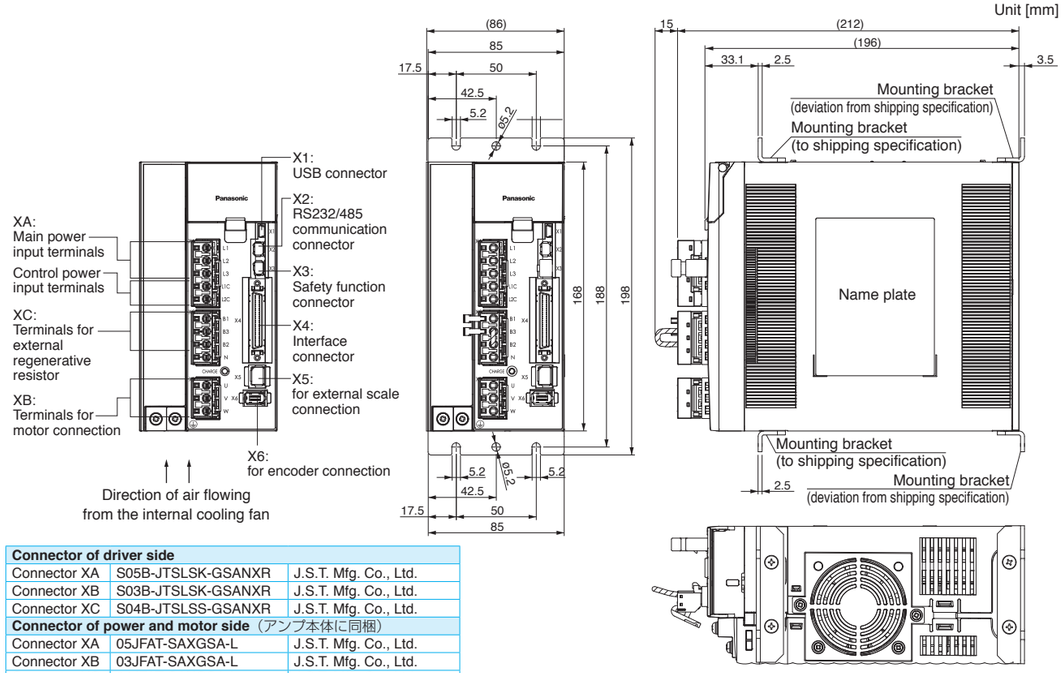

Connector of driver side		
Connector XA	S05B-JTSLSK-GSANXR	J.S.T. Mfg. Co., Ltd.
Connector XB	S03B-JTSLSK-GSANXR	J.S.T. Mfg. Co., Ltd.
Connector XC	S04B-JTSLSS-GSANXR	J.S.T. Mfg. Co., Ltd.
Connector of power and motor side（アンプ本体に同梱）		
Connector XA	05JFAT-SAXGSA-L	J.S.T. Mfg. Co., Ltd.
Connector XB	03JFAT-SAXGSA-L	J.S.T. Mfg. Co., Ltd.
Connector XC	04JFAT-SAXGSA-L	J.S.T. Mfg. Co., Ltd.

※コネクタ X1 ～ X7 のアンプ側コネクタは、A 枠と同じですので、A 枠の表をご覧ください。

Mass: 2.7kg

D-frame (400V)

Unit [mm]

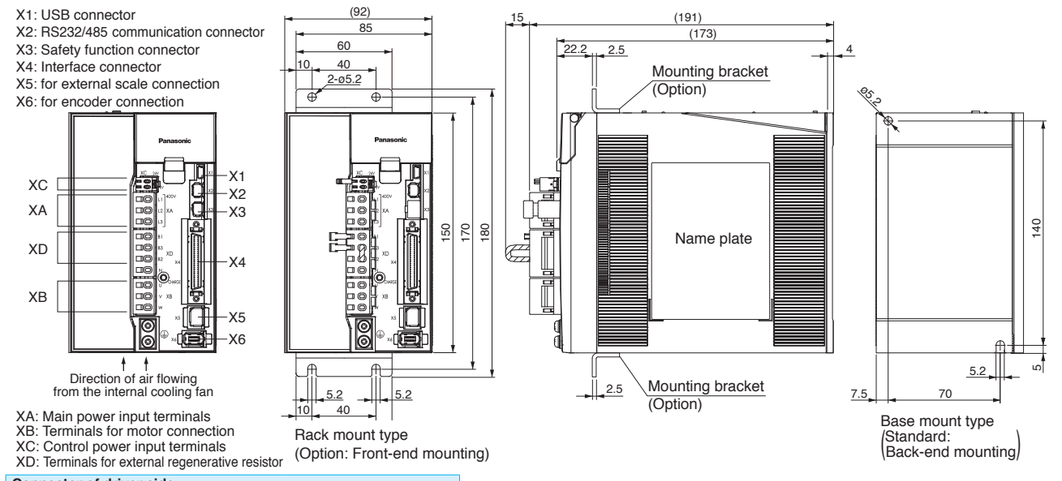

Connector of driver side		
Connector XA	S03B-JTSMSS-GSANYR	J.S.T. Mfg. Co., Ltd.
Connector XB	S03B-JTSMSK-GSANXR	J.S.T. Mfg. Co., Ltd.
Connector XC	S02B-J25SK-GGR	J.S.T. Mfg. Co., Ltd.
Connector XD	S04B-JTSMSK-GSANXR	J.S.T. Mfg. Co., Ltd.
Connector of power and motor side（アンプ本体に同梱）		
Connector XA	03JFAT-SAYGSA-M	J.S.T. Mfg. Co., Ltd.
Connector XB	03JFAT-SAXGSA-M	J.S.T. Mfg. Co., Ltd.
Connector XC	02MJFAT-SAGF	J.S.T. Mfg. Co., Ltd.
Connector XD	04JFAT-SAXGSA-M	J.S.T. Mfg. Co., Ltd.

※コネクタ X1 ～ X7 のアンプ側コネクタは、A 枠と同じですので、A 枠の表をご覧ください。

Mass: 1.9kg

E-frame (400V)

Unit [mm]

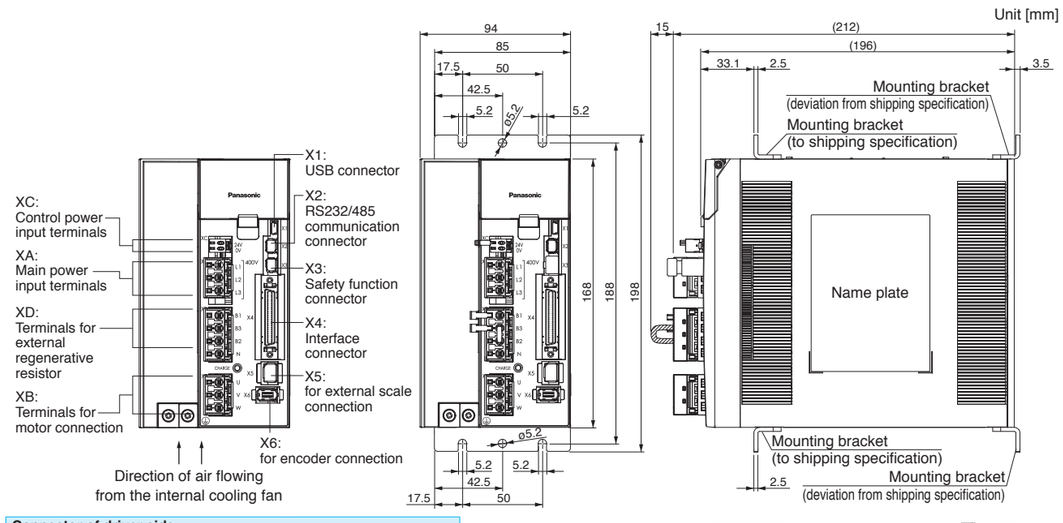

Connector of driver side		
Connector XA	S03B-JTSLSS-GSANYR	J.S.T. Mfg. Co., Ltd.
Connector XB	S03B-JTSLSK-GSANXR	J.S.T. Mfg. Co., Ltd.
Connector XC	S02B-J25SK-GGR	J.S.T. Mfg. Co., Ltd.
Connector XD	S04B-JTSLSK-GSANXR	J.S.T. Mfg. Co., Ltd.
Connector of power and motor side（アンプ本体に同梱）		
Connector XA	03JFAT-SAYGSA-L	J.S.T. Mfg. Co., Ltd.
Connector XB	03JFAT-SAXGSA-L	J.S.T. Mfg. Co., Ltd.
Connector XC	02MJFAT-SAGF	J.S.T. Mfg. Co., Ltd.
Connector XD	04JFAT-SAXGSA-L	J.S.T. Mfg. Co., Ltd.

※コネクタ X1 ～ X7 のアンプ側コネクタは、A 枠と同じですので、A 枠の表をご覧ください。

Mass: 2.7kg

F-frame (200V)

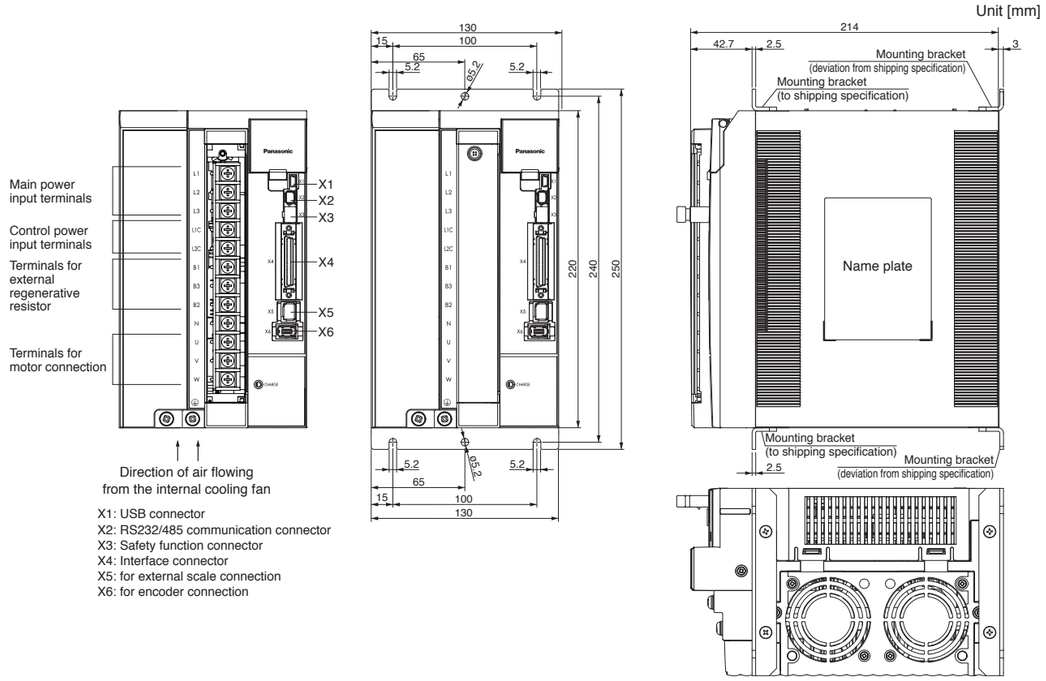

Mass: 4.8kg

※アンプ側コネクタは、A 枠と同じですので、A 枠の表をご覧ください。

F-frame (400V)

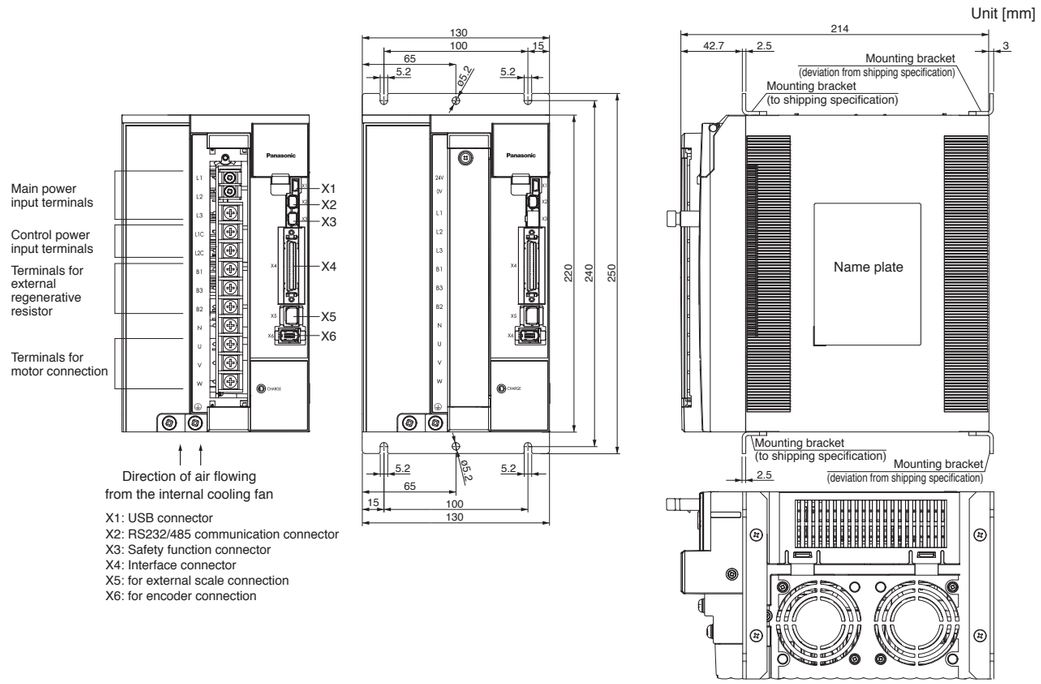

Mass: 4.7kg

※アンプ側コネクタは、A 枠と同じですので、A 枠の表をご覧ください。

Features

- Line-up: 50W to 5.0kW
- Max speed: 6000r/min (MSME 50W to 750W)
- Low inertia (MSME) to High inertia (MHME).
- Low cogging torque: Rated torque ratio 0.5% (typical value).
- 20-bit incremental encoder (1,048,576 pulse)
- 17-bit absolute encoder (131,072 pulse).
- Enclosure rating: IP67 (M*ME), IP65 (M*MD)
- Compact & Light weight

Small capacity type

[MSME (50W to 750W)]

Middle capacity type

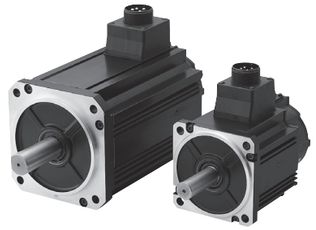

[MSME (1.0kW to 5.0kW)]

Motor (Scheduled to be released.)

- MDME 7.5kW, 11kW, 15kW
- MHME 7.5kW
- MGME 4.5kW, 6.0kW
- MFME 1.5kW, 2.5kW, 4.5kW
- Motor with Gear Reduce: 100W, 200W, 400W, 750W

Environmental Conditions

Item		Conditions
Ambient temperature *1		0˚C to 40˚C (free from freezing)
Ambient humidity		20% to 85% RH (free from condensation)
Storage temperature *2		–20˚C to 65˚C (Max.temperature guarantee: 80˚C for 72 hours)
Storage humidity		20% to 85% RH (free from condensation)
Vibration	Motor only	Lower than 49m/s^2 (5G) at running, 24.5m/s^2 (2.5G) at stall
Impact	Motor only	Lower than 98m/s^2 (10G)
Enclosure rating (Motor only)	Leadwire type *3	IP65 (except rotating portion of output shaft and readwire end.)
	Connector type*3*4	IP67 (except rotating portion of output shaft and connecting pin part of the motor connector and the encoder connector)
Altitude		Lower than 1000m

*1 Ambient temperature to be measured at 5cm away from the motor.
*2 Permissible temperature for short duration such as transportation.
*3 These motors conform to the test conditions specified in EN standards (EN60529, EN60034-5). Do not use these motors in application where water proof performance is required such as continuous wash-down operation.
*4 This condition is applied when the connector mounting screw in case of motor 750W or less are tightened to the recommended tightening torque (Refer to 1-16, 2-18, 2-00). Be sure to use mounting screw supplied with the connector.

<Note>
回転方向の初期設定を
正方向(CCW)、
負方向(CW)と
定義しています。
ご注意ください。

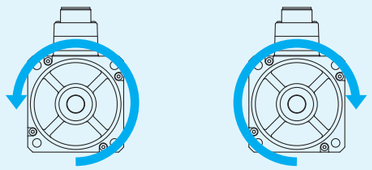

Positive direction (CCW) **Negative direction (CW)**

Motor Contents

MSME (100V/200V) 50W to 750W ..... P.36 to 44
MSME (200V) 1.0kW to 5.0kW ..... P.45 to 50
MDME (200V) 1.0kW to 5.0kW ..... P.51 to 56
MGME (200V) 0.9kW to 3.0kW ..... P.57 to 59
MHME (200V) 1.0kW to 5.0kW ..... P.60 to 65
MSMD (100V/200V) 50W to 750W ..... P.66 to 74
MHMD (100V/200V) 200W to 750W ..... P.76 to 80
MSME (400V) 1.0kW to 5.0kW ..... P.82 to 87
MDME (400V) 1.0kW to 5.0kW ..... P.88 to 93
MGME (400V) 0.9kW to 3.0kW ..... P.94 to 96
MHME (400V) 1.0kW to 5.0kW .... P.98 to 103

Motor Specifications 100V MSME 50W [Low inertia, Small capacity]

Specifications

		AC100V	
Motor model *1	MSME	5AZG1□	5AZS1□
Applicable driver *2	Model No. A5 series	MADHT1105	
	Model No. A5E series	MADHT1105E	
	Frame symbol	A-frame	
Power supply capacity (kVA)		0.4	
Rated output (W)		50	
Rated torque (N·m)		0.16	
Momentary Max. peak torque (N·m)		0.48	
Rated current (A(rms))		1.1	
Max. current (A(o-p))		4.7	
Regenerative brake frequency (times/min) Note)1	Without option	No limit Note)2	
	DV0P4280	No limit Note)2	
Rated rotational speed (r/min)		3000	
Max. rotational speed (r/min)		6000	
Moment of inertia of rotor ($\times 10^{-4}$kg·m^2)	Without brake	0.025	
	With brake	0.027	
Recommended moment of inertia ratio of the load and the rotor Note)3		30 times or less	
Rotary encoder specifications Note)5		20-bit Incremental	17-bit Absolute
	Resolution per single turn	1,048,576	131,072

• **Brake specifications** (For details, refer to P.105)
(This brake will be released when it is energized. Do not use this for braking the motor in motion.)

Static friction torque (N·m)	0.29 or more
Engaging time (ms)	35 or less
Releasing time (ms) Note)4	20 or less
Exciting current (DC) (A)	0.3
Releasing voltage (DC) (V)	1 or more
Exciting voltage (DC) (V)	24±1.2

• **Permissible load** (For details, refer to P.104)

During assembly	Radial load P-direction (N)	147
	Thrust load A-direction (N)	88
	Thrust load B-direction (N)	117.6
During operation	Radial load P-direction (N)	68.6
	Thrust load A, B-direction (N)	58.8

• For details of Note 1 to Note 5, refer to P.104.
• Dimensions of Driver, refer to P.30.
*1 Rotaly encoder specifications: □
*2 The product that the end of driver model designation has "E" is "positioning type".
Detail of model designation, refer to P.11.

Torque characteristics (at AC100V of power voltage <Dotted line represents the torque at 10% less supply voltage.>)

Without oil seal

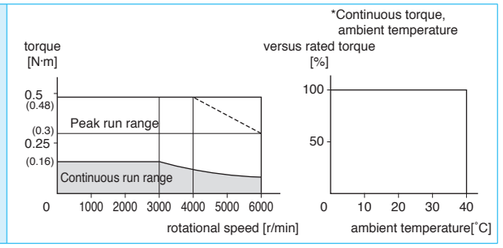

With oil seal

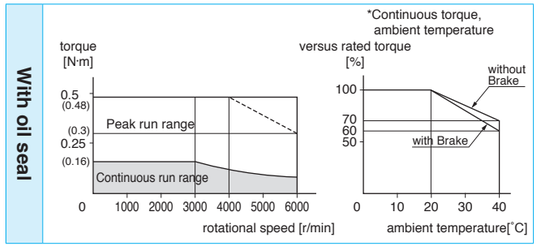

Dimensions

<Without Brake>

Mass (kg)/ 0.32

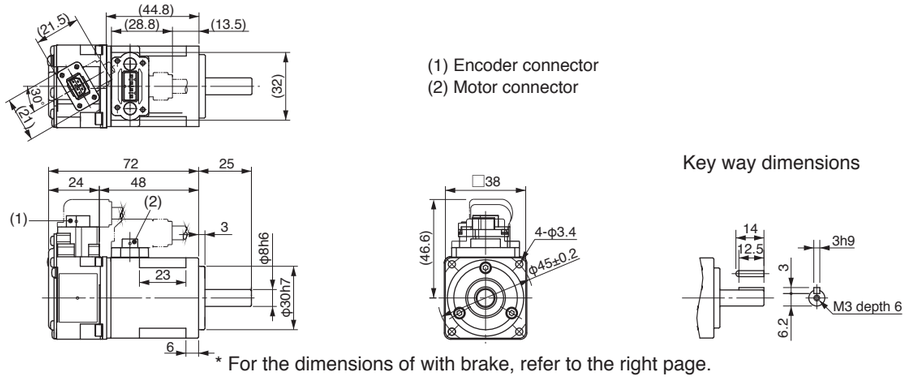

(1) Encoder connector
(2) Motor connector

Key way dimensions

* For the dimensions of with brake, refer to the right page.

<Cautions> Reduce the moment of inertia ratio if high speed response operation is required.
Dimensions are subject to change without notice. Contact us or a dealer for the latest information.
Read the Instruction Manual carefully and understand all precautions and remarks before using the products.

Motor Specifications 200V MSME 50W [Low inertia, Small capacity]

Specifications

		AC200V	
Motor model *1	MSME	5AZG1□	5AZS1□
Applicable driver *2	Model No. A5 series	MADHT1505	
	Model No. A5E series	MADHT1505E	
	Frame symbol	A-frame	
Power supply capacity (kVA)		0.5	
Rated output (W)		50	
Rated torque (N·m)		0.16	
Momentary Max. peak torque (N·m)		0.48	
Rated current (A(rms))		1.1	
Max. current (A(o-p))		4.7	
Regenerative brake frequency (times/min) Note)1	Without option	No limit Note)2	
	DV0P4280	No limit Note)2	
Rated rotational speed (r/min)		3000	
Max. rotational speed (r/min)		6000	
Moment of inertia of rotor ($\times 10^{-4}$kg·m^2)	Without brake	0.025	
	With brake	0.027	
Recommended moment of inertia ratio of the load and the rotor Note)3		30 times or less	
Rotary encoder specifications Note)5		20-bit Incremental	17-bit Absolute
	Resolution per single turn	1,048,576	131,072

• **Brake specifications** (For details, refer to P.105)
(This brake will be released when it is energized. Do not use this for braking the motor in motion.)

Static friction torque (N·m)	0.29 or more
Engaging time (ms)	35 or less
Releasing time (ms) Note)4	20 or less
Exciting current (DC) (A)	0.3
Releasing voltage (DC) (V)	1 or more
Exciting voltage (DC) (V)	24±1.2

• **Permissible load** (For details, refer to P.104)

During assembly	Radial load P-direction (N)	147
	Thrust load A-direction (N)	88
	Thrust load B-direction (N)	117.6
During operation	Radial load P-direction (N)	68.6
	Thrust load A, B-direction (N)	58.8

• For details of Note 1 to Note 5, refer to P.104.
• Dimensions of Driver, refer to P.30.
*1 Rotaly encoder specifications: □
*2 The product that the end of driver model designation has "E" is "positioning type".
Detail of model designation, refer to P.11.

Torque characteristics (at AC200V of power voltage <Dotted line represents the torque at 10% less supply voltage.>)

Without oil seal

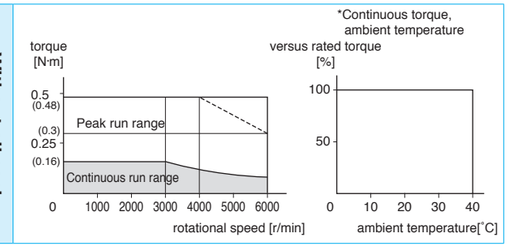

With oil seal

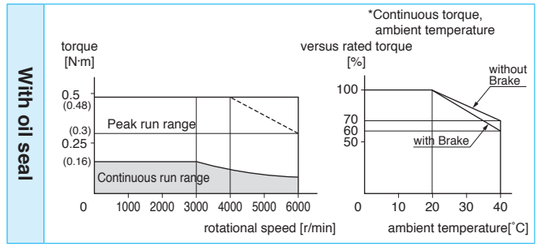

Dimensions

<With Brake>

Mass (kg)/ 0.53

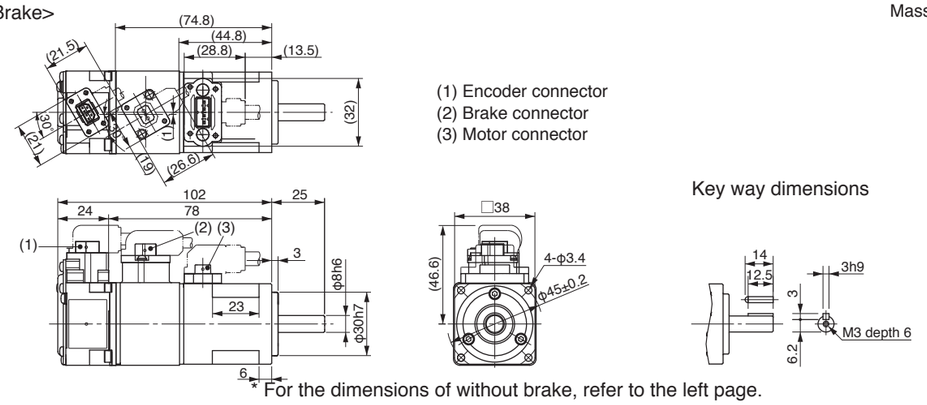

(1) Encoder connector
(2) Brake connector
(3) Motor connector

Key way dimensions

* For the dimensions of without brake, refer to the left page.

<Cautions> Reduce the moment of inertia ratio if high speed response operation is required.
Dimensions are subject to change without notice. Contact us or a dealer for the latest information.
Read the Instruction Manual carefully and understand all precautions and remarks before using the products.

Motor Specifications 100V MSME 100W [Low inertia, Small capacity]

Specifications

			AC100V	
Motor model *1		MSME	011G1□	011S1□
Applicable driver *2	Model No.	A5 series	MADHT1107	
		A5E series	MADHT1107E	
	Frame symbol		A-frame	
Power supply capacity		(kVA)	0.4	
Rated output		(W)	100	
Rated torque		(N·m)	0.32	
Momentary Max. peak torque		(N·m)	0.95	
Rated current		(A(rms))	1.6	
Max. current		(A(o-p))	6.9	
Regenerative brake frequency (times/min) Note)1	Without option		No limit Note)2	
	DV0P4280		No limit Note)2	
Rated rotational speed		(r/min)	3000	
Max. rotational speed		(r/min)	6000	
Moment of inertia of rotor ($\times10^{-4}$kg·m^2)	Without brake		0.051	
	With brake		0.054	
Recommended moment of inertia ratio of the load and the rotor Note)3			30 times or less	
Rotary encoder specifications Note)5			20-bit Incremental	17-bit Absolute
	Resolution per single turn		1,048,576	131,072

• **Brake specifications** (For details, refer to P.105)
(This brake will be released when it is energized. Do not use this for braking the motor in motion.)

Static friction torque (N·m)	0.29 or more
Engaging time (ms)	35 or less
Releasing time (ms) Note)4	20 or less
Exciting current (DC) (A)	0.3
Releasing voltage (DC) (V)	1 or more
Exciting voltage (DC) (V)	24±1.2

• **Permissible load** (For details, refer to P.104)

During assembly	Radial load P-direction (N)	147
	Thrust load A-direction (N)	88
	Thrust load B-direction (N)	117.6
During operation	Radial load P-direction (N)	68.6
	Thrust load A, B-direction (N)	58.8

• For details of Note 1 to Note 5, refer to P.104.
• Dimensions of Driver, refer to P.30.
*1 Rotaly encoder specifications: □
*2 The product that the end of driver model designation has "E" is "positioning type".
Detail of model designation, refer to P.11.

Torque characteristics (at AC100V of power voltage <Dotted line represents the torque at 10% less supply voltage.>)

Without oil seal

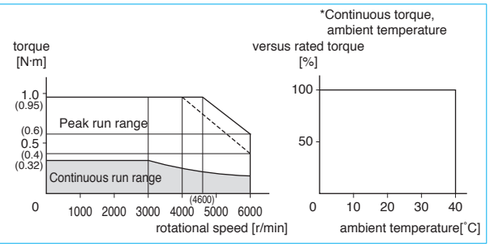

With oil seal

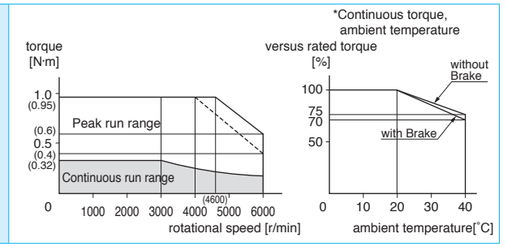

Dimensions

<Without Brake>

Mass (kg)/ 0.47

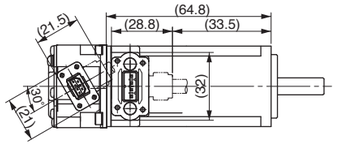

(1) Encoder connector
(2) Motor connector

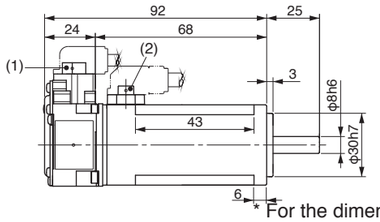

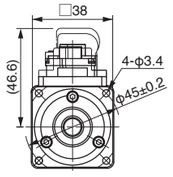

Key way dimensions

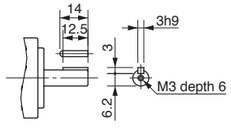

* For the dimensions of with brake, refer to the right page.

<Cautions> Reduce the moment of inertia ratio if high speed response operation is required.
Dimensions are subject to change without notice. Contact us or a dealer for the latest information.
Read the Instruction Manual carefully and understand all precautions and remarks before using the products.

Motor Specifications 200V MSME 100W [Low inertia, Small capacity]

Specifications

			AC200V	
Motor model *1		MSME	012G1□	012S1□
Applicable driver *2	Model No.	A5 series	MADHT1505	
		A5E series	MADHT1505E	
	Frame symbol		A-frame	
Power supply capacity		(kVA)	0.5	
Rated output		(W)	100	
Rated torque		(N·m)	0.32	
Momentary Max. peak torque		(N·m)	0.95	
Rated current		(A(rms))	1.1	
Max. current		(A(o-p))	4.7	
Regenerative brake frequency (times/min) Note)1	Without option		No limit Note)2	
	DV0P4280		No limit Note)2	
Rated rotational speed		(r/min)	3000	
Max. rotational speed		(r/min)	6000	
Moment of inertia of rotor ($\times10^{-4}$kg·m^2)	Without brake		0.051	
	With brake		0.054	
Recommended moment of inertia ratio of the load and the rotor Note)3			30 times or less	
Rotary encoder specifications Note)5			20-bit Incremental	17-bit Absolute
	Resolution per single turn		1,048,576	131,072

• **Brake specifications** (For details, refer to P.105)
(This brake will be released when it is energized. Do not use this for braking the motor in motion.)

Static friction torque (N·m)	0.29 or more
Engaging time (ms)	35 or less
Releasing time (ms) Note)4	20 or less
Exciting current (DC) (A)	0.3
Releasing voltage (DC) (V)	1 or more
Exciting voltage (DC) (V)	24±1.2

• **Permissible load** (For details, refer to P.104)

During assembly	Radial load P-direction (N)	147
	Thrust load A-direction (N)	88
	Thrust load B-direction (N)	117.6
During operation	Radial load P-direction (N)	68.6
	Thrust load A, B-direction (N)	58.8

• For details of Note 1 to Note 5, refer to P.104.
• Dimensions of Driver, refer to P.30.
*1 Rotaly encoder specifications: □
*2 The product that the end of driver model designation has "E" is "positioning type".
Detail of model designation, refer to P.11.

Torque characteristics (at AC200V of power voltage <Dotted line represents the torque at 10% less supply voltage.>)

Without oil seal

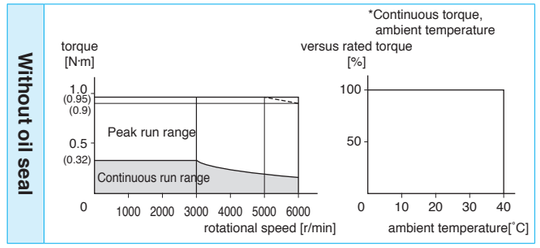

With oil seal

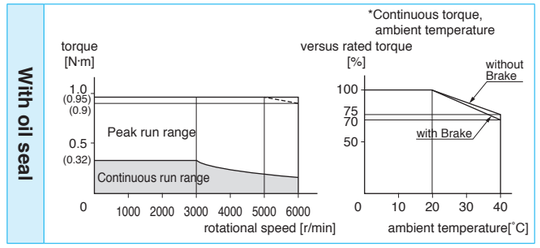

Dimensions

<With Brake>

Mass (kg)/ 0.68

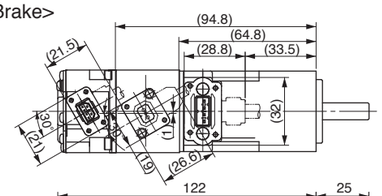

(1) Encoder connector
(2) Brake connector
(3) Motor connector

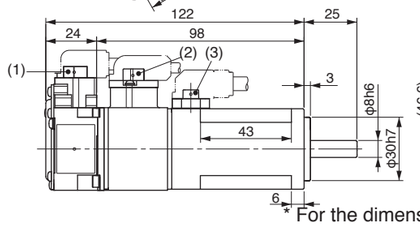

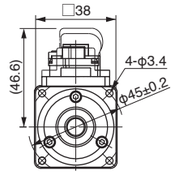

Key way dimensions

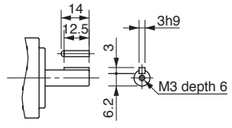

* For the dimensions of without brake, refer to the left page.

<Cautions> Reduce the moment of inertia ratio if high speed response operation is required.
Dimensions are subject to change without notice. Contact us or a dealer for the latest information.
Read the Instruction Manual carefully and understand all precautions and remarks before using the products.

Motor Specifications 100V MSME 200W [Low inertia, Small capacity]

Specifications

		AC100V	
Motor model *1	MSME	021G1□	021S1□
Applicable driver *2	Model No. A5 series	MBDHT2110	
	Model No. A5E series	MBDHT2110E	
	Frame symbol	B-frame	
Power supply capacity (kVA)		0.5	
Rated output (W)		200	
Rated torque (N·m)		0.64	
Momentary Max. peak torque (N·m)		1.91	
Rated current (A(rms))		2.5	
Max. current (A(o-p))		10.6	
Regenerative brake frequency (times/min) Note)1	Without option	No limit Note)2	
	DV0P4283	No limit Note)2	
Rated rotational speed (r/min)		3000	
Max. rotational speed (r/min)		6000	
Moment of inertia of rotor ($\times10^{-4}$kg·m^2)	Without brake	0.14	
	With brake	0.16	
Recommended moment of inertia ratio of the load and the rotor Note)3		30 times or less	
Rotary encoder specifications Note)5		20-bit Incremental	17-bit Absolute
	Resolution per single turn	1,048,576	131,072

• **Brake specifications** (For details, refer to P.105)
(This brake will be released when it is energized. Do not use this for braking the motor in motion.)

Static friction torque (N·m)	1.27 or more
Engaging time (ms)	50 or less
Releasing time (ms) Note)4	15 or less
Exciting current (DC) (A)	0.36
Releasing voltage (DC) (V)	1 or more
Exciting voltage (DC) (V)	24±1.2

• **Permissible load** (For details, refer to P.104)

During assembly	Radial load P-direction (N)	392
	Thrust load A-direction (N)	147
	Thrust load B-direction (N)	196
During operation	Radial load P-direction (N)	245
	Thrust load A, B-direction (N)	98

• For details of Note 1 to Note 5, refer to P.104.
• Dimensions of Driver, refer to P.30.
*1 Rotaly encoder specifications: □
*2 The product that the end of driver model designation has "E" is "positioning type".
Detail of model designation, refer to P.11.

Torque characteristics (at AC100V of power voltage <Dotted line represents the torque at 10% less supply voltage.>)

Without oil seal

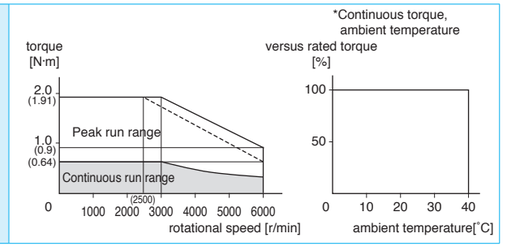

With oil seal

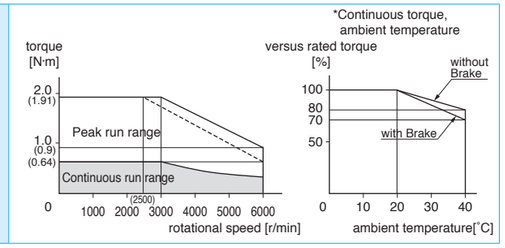

Dimensions

<Without Brake>

Mass (kg)/ 0.82

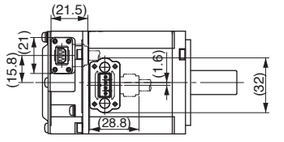

(1) Encoder connector
(2) Motor connector

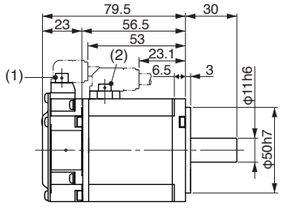

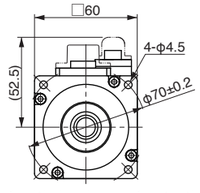

Key way dimensions

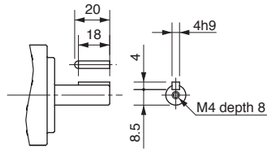

* For the dimensions of with brake, refer to the right page.

<Cautions> Reduce the moment of inertia ratio if high speed response operation is required.
Dimensions are subject to change without notice. Contact us or a dealer for the latest information.
Read the Instruction Manual carefully and understand all precautions and remarks before using the products.

Motor Specifications 200V MSME 200W [Low inertia, Small capacity]

Specifications

		AC200V	
Motor model *1	MSME	022G1□	022S1□
Applicable driver *2	Model No. A5 series	MADHT1507	
	Model No. A5E series	MADHT1507E	
	Frame symbol	A-frame	
Power supply capacity (kVA)		0.5	
Rated output (W)		200	
Rated torque (N·m)		0.64	
Momentary Max. peak torque (N·m)		1.91	
Rated current (A(rms))		1.5	
Max. current (A(o-p))		6.5	
Regenerative brake frequency (times/min) Note)1	Without option	No limit Note)2	
	DV0P4283	No limit Note)2	
Rated rotational speed (r/min)		3000	
Max. rotational speed (r/min)		6000	
Moment of inertia of rotor ($\times10^{-4}$kg·m^2)	Without brake	0.14	
	With brake	0.16	
Recommended moment of inertia ratio of the load and the rotor Note)3		30 times or less	
Rotary encoder specifications Note)5		20-bit Incremental	17-bit Absolute
	Resolution per single turn	1,048,576	131,072

• **Brake specifications** (For details, refer to P.105)
(This brake will be released when it is energized. Do not use this for braking the motor in motion.)

Static friction torque (N·m)	1.27 or more
Engaging time (ms)	50 or less
Releasing time (ms) Note)4	15 or less
Exciting current (DC) (A)	0.36
Releasing voltage (DC) (V)	1 or more
Exciting voltage (DC) (V)	24±1.2

• **Permissible load** (For details, refer to P.104)

During assembly	Radial load P-direction (N)	392
	Thrust load A-direction (N)	147
	Thrust load B-direction (N)	196
During operation	Radial load P-direction (N)	245
	Thrust load A, B-direction (N)	98

• For details of Note 1 to Note 5, refer to P.104.
• Dimensions of Driver, refer to P.30.
*1 Rotaly encoder specifications: □
*2 The product that the end of driver model designation has "E" is "positioning type".
Detail of model designation, refer to P.11.

Torque characteristics (at AC200V of power voltage <Dotted line represents the torque at 10% less supply voltage.>)

Without oil seal

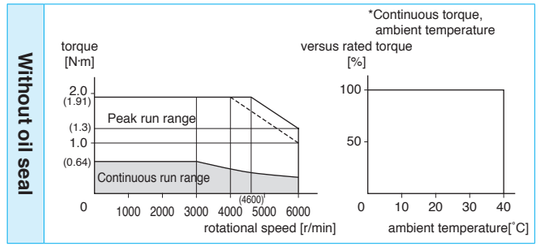

With oil seal

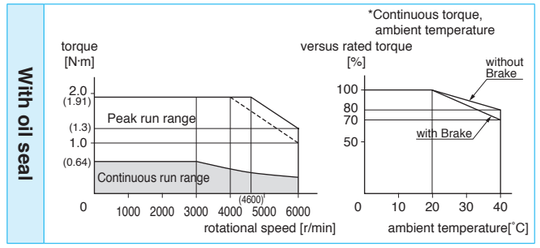

Dimensions

<With Brake>

Mass (kg)/ 1.30

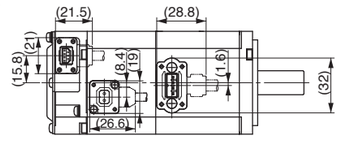

(1) Encoder connector
(2) Brake connector
(3) Motor connector

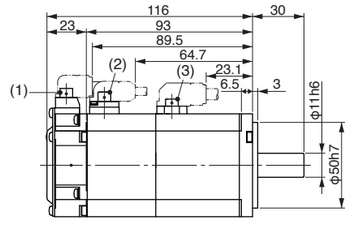

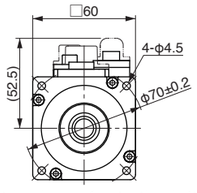

Key way dimensions

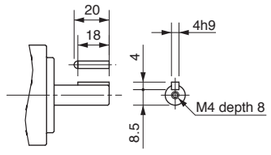

* For the dimensions of without brake, refer to the left page.

<Cautions> Reduce the moment of inertia ratio if high speed response operation is required.
Dimensions are subject to change without notice. Contact us or a dealer for the latest information.
Read the Instruction Manual carefully and understand all precautions and remarks before using the products.

Motor Specifications 100V MSME 400W [Low inertia, Small capacity]

Specifications

			AC100V	
Motor model *1		MSME	041G1□	041S1□
Applicable driver *2	Model No.	A5 series	MCDHT3120	
		A5E series	MCDHT3120E	
	Frame symbol		C-frame	
Power supply capacity (kVA)			0.9	
Rated output (W)			400	
Rated torque (N·m)			1.3	
Momentary Max. peak torque (N·m)			3.8	
Rated current (A(rms))			4.6	
Max. current (A(o-p))			19.5	
Regenerative brake frequency (times/min) Note)1	Without option		No limit Note)2	
	DV0P4282		No limit Note)2	
Rated rotational speed (r/min)			3000	
Max. rotational speed (r/min)			6000	
Moment of inertia of rotor ($\times 10^{-4}$kg·m^2)	Without brake		0.26	
	With brake		0.28	
Recommended moment of inertia ratio of the load and the rotor Note)3			30 times or less	
Rotary encoder specifications Note)5			20-bit Incremental	17-bit Absolute
	Resolution per single turn		1,048,576	131,072

• **Brake specifications** (For details, refer to P.105)
(This brake will be released when it is energized. Do not use this for braking the motor in motion.)

Static friction torque (N·m)	1.27 or more
Engaging time (ms)	50 or less
Releasing time (ms) Note)4	15 or less
Exciting current (DC) (A)	0.36
Releasing voltage (DC) (V)	1 or more
Exciting voltage (DC) (V)	24±1.2

• **Permissible load** (For details, refer to P.104)

During assembly	Radial load P-direction (N)	392
	Thrust load A-direction (N)	147
	Thrust load B-direction (N)	196
During operation	Radial load P-direction (N)	245
	Thrust load A, B-direction (N)	98

• For details of Note 1 to Note 5, refer to P.104.
• Dimensions of Driver, refer to P.31.
*1 Rotaly encoder specifications: □
*2 The product that the end of driver model designation has "E" is "positioning type".
Detail of model designation, refer to P.11.

Torque characteristics (at AC100V of power voltage <Dotted line represents the torque at 10% less supply voltage.>)

Without oil seal

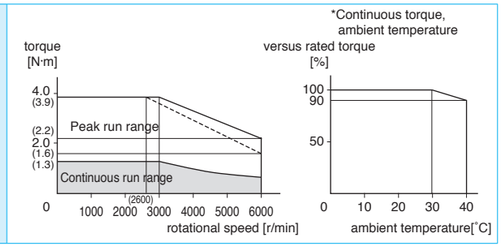

With oil seal

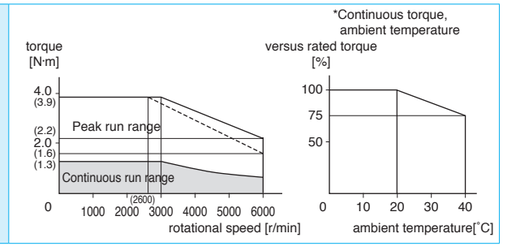

Dimensions

<Without Brake>

Mass (kg)/ 1.2

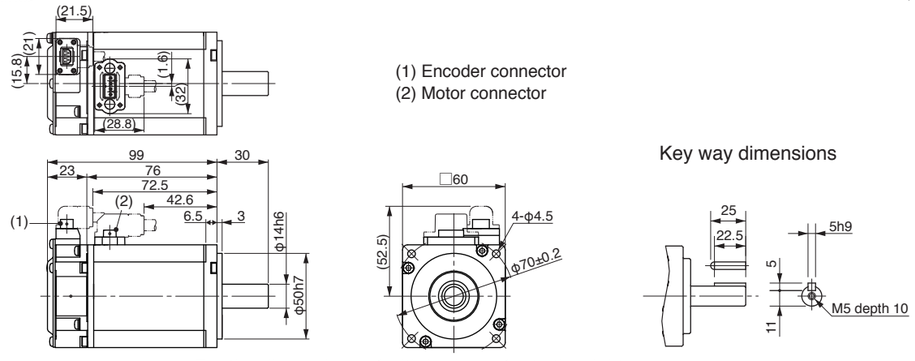

(1) Encoder connector
(2) Motor connector

Key way dimensions

* For the dimensions of with brake, refer to the right page.

<Cautions> Reduce the moment of inertia ratio if high speed response operation is required.
Dimensions are subject to change without notice. Contact us or a dealer for the latest information.
Read the Instruction Manual carefully and understand all precautions and remarks before using the products.

Motor Specifications 200V MSME 400W [Low inertia, Small capacity]

Specifications

			AC200V	
Motor model *1		MSME	042G1□	042S1□
Applicable driver *2	Model No.	A5 series	MBDHT2510	
		A5E series	MBDHT2510E	
	Frame symbol		B-frame	
Power supply capacity (kVA)			0.9	
Rated output (W)			400	
Rated torque (N·m)			1.3	
Momentary Max. peak torque (N·m)			3.8	
Rated current (A(rms))			2.4	
Max. current (A(o-p))			10.2	
Regenerative brake frequency (times/min) Note)1	Without option		No limit Note)2	
	DV0P4283		No limit Note)2	
Rated rotational speed (r/min)			3000	
Max. rotational speed (r/min)			6000	
Moment of inertia of rotor ($\times 10^{-4}$kg·m^2)	Without brake		0.26	
	With brake		0.28	
Recommended moment of inertia ratio of the load and the rotor Note)3			30 times or less	
Rotary encoder specifications Note)5			20-bit Incremental	17-bit Absolute
	Resolution per single turn		1,048,576	131,072

• **Brake specifications** (For details, refer to P.105)
(This brake will be released when it is energized. Do not use this for braking the motor in motion.)

Static friction torque (N·m)	1.27 or more
Engaging time (ms)	50 or less
Releasing time (ms) Note)4	15 or less
Exciting current (DC) (A)	0.36
Releasing voltage (DC) (V)	1 or more
Exciting voltage (DC) (V)	24±1.2

• **Permissible load** (For details, refer to P.104)

During assembly	Radial load P-direction (N)	392
	Thrust load A-direction (N)	147
	Thrust load B-direction (N)	196
During operation	Radial load P-direction (N)	245
	Thrust load A, B-direction (N)	98

• For details of Note 1 to Note 5, refer to P.104.
• Dimensions of Driver, refer to P.30.
*1 Rotaly encoder specifications: □
*2 The product that the end of driver model designation has "E" is "positioning type".
Detail of model designation, refer to P.11.

Torque characteristics (at AC200V of power voltage <Dotted line represents the torque at 10% less supply voltage.>)

Without oil seal

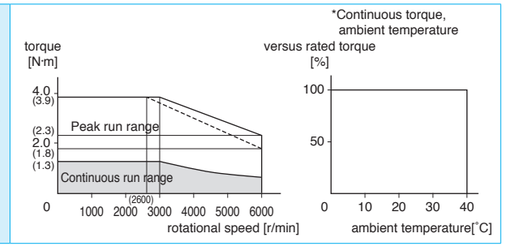

With oil seal

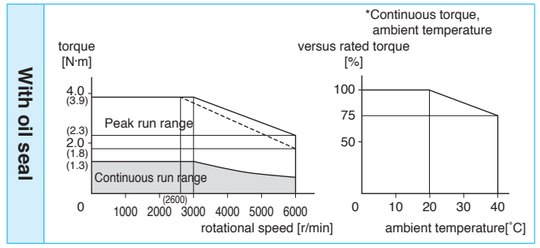

Dimensions

<With Brake>

Mass (kg)/ 1.7

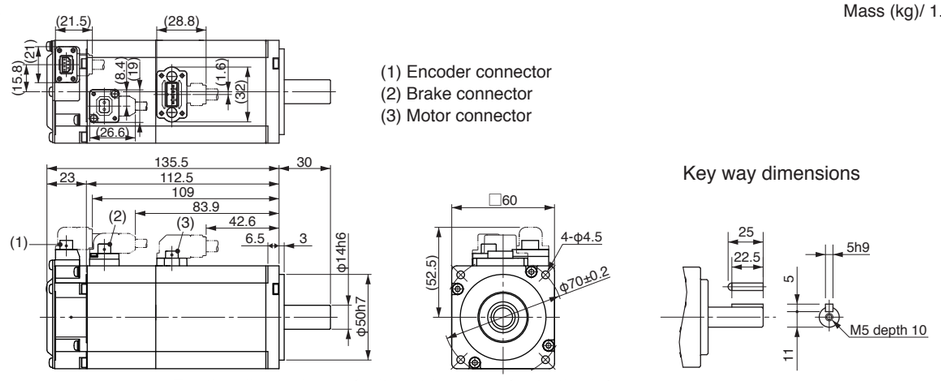

(1) Encoder connector
(2) Brake connector
(3) Motor connector

Key way dimensions

* For the dimensions of without brake, refer to the left page.

<Cautions> Reduce the moment of inertia ratio if high speed response operation is required.
Dimensions are subject to change without notice. Contact us or a dealer for the latest information.
Read the Instruction Manual carefully and understand all precautions and remarks before using the products.

Motor Specifications 200V MSME 750W [Low inertia, Small capacity]

Specifications

			AC200V	
Motor model *1		MSME	082G1□	082S1□
Applicable driver *2	Model No.	A5 series	MCDHT3520	
		A5E series	MCDHT3520E	
	Frame symbol		C-frame	
Power supply capacity (kVA)			1.3	
Rated output (W)			750	
Rated torque (N·m)			2.4	
Momentary Max. peak torque (N·m)			7.1	
Rated current (A(rms))			4.1	
Max. current (A(o-p))			17.4	
Regenerative brake frequency (times/min) Note)1	Without option		No limit Note)2	
	DV0P4283		No limit Note)2	
Rated rotational speed (r/min)			3000	
Max. rotational speed (r/min)			6000	
Moment of inertia of rotor ($\times 10^{-4}$kg·m^2)	Without brake		0.87	
	With brake		0.97	
Recommended moment of inertia ratio of the load and the rotor Note)3			20 times or less	
Rotary encoder specifications Note)5			20-bit Incremental	17-bit Absolute
	Resolution per single turn		1,048,576	131,072

• **Brake specifications** (For details, refer to P.105)
(This brake will be released when it is energized.
Do not use this for braking the motor in motion.)

Static friction torque (N·m)	2.45 or more
Engaging time (ms)	70 or less
Releasing time (ms) Note)4	20 or less
Exciting current (DC) (A)	0.42
Releasing voltage (DC) (V)	1 or more
Exciting voltage (DC) (V)	24±1.2

• **Permissible load** (For details, refer to P.104)

During assembly	Radial load P-direction (N)	686
	Thrust load A-direction (N)	294
	Thrust load B-direction (N)	392
During operation	Radial load P-direction (N)	392
	Thrust load A, B-direction (N)	147

• For details of Note 1 to Note 5, refer to P.104.
• Dimensions of Driver, refer to P.31.
*1 Rotaly encoder specifications: □
*2 The product that the end of driver model designation has "E" is "positioning type".
Detail of model designation, refer to P.11.

Torque characteristics (at AC200V of power voltage <Dotted line represents the torque at 10% less supply voltage.>)

Without oil seal

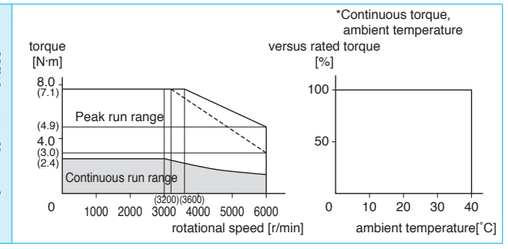

With oil seal

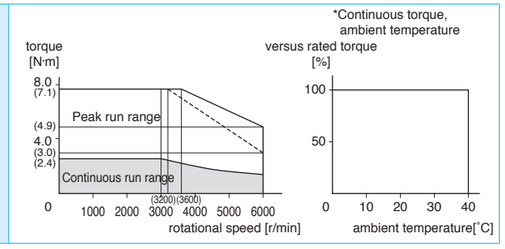

Dimensions

<With Brake>

Mass (kg)/ Without brake: 2.3
With brake: 3.1

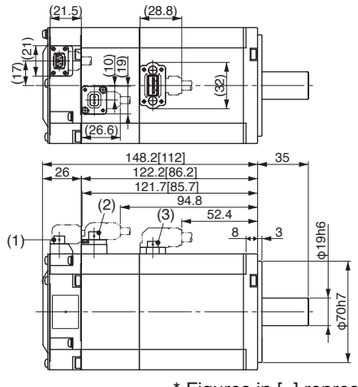

(1) Encoder connector
(2) Brake connector
(3) Motor connector

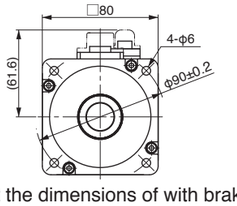

Key way dimensions

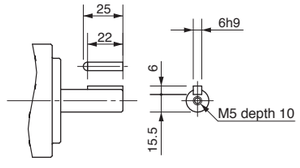

* Figures in [ ] represent the dimensions of with brake.

<Cautions> Reduce the moment of inertia ratio if high speed response operation is required.
Dimensions are subject to change without notice. Contact us or a dealer for the latest information.
Read the Instruction Manual carefully and understand all precautions and remarks before using the products.

Motor Specifications 200V MSME 1.0kW [Low inertia, Middle capacity]

Specifications

			AC200V	
Motor model *1		MSME	102G1□	102S1□
Applicable driver *2	Model No.	A5 series	MDDHT5540	
		A5E series	MDDHT5540E	
	Frame symbol		D-frame	
Power supply capacity (kVA)			1.8	
Rated output (W)			1.0	
Rated torque (N·m)			3.18	
Momentary Max. peak torque (N·m)			9.55	
Rated current (A(rms))			6.6	
Max. current (A(o-p))			28	
Regenerative brake frequency (times/min) Note)1	Without option		No limit Note)2	
	DV0P4284		No limit Note)2	
Rated rotational speed (r/min)			3000	
Max. rotational speed (r/min)			5000	
Moment of inertia of rotor ($\times 10^{-4}$kg·m^2)	Without brake		2.03	
	With brake		2.35	
Recommended moment of inertia ratio of the load and the rotor Note)3			15 times or less	
Rotary encoder specifications Note)5			20-bit Incremental	17-bit Absolute
	Resolution per single turn		1,048,576	131,072

• **Brake specifications** (For details, refer to P.105)
(This brake will be released when it is energized.
Do not use this for braking the motor in motion.)

Static friction torque (N·m)	7.8 or more
Engaging time (ms)	50 or less
Releasing time (ms) Note)4	15 or less
Exciting current (DC) (A)	0.81±10%
Releasing voltage (DC) (V)	2 or more
Exciting voltage (DC) (V)	24±2.4

• **Permissible load** (For details, refer to P.104)

During assembly	Radial load P-direction (N)	980
	Thrust load A-direction (N)	588
	Thrust load B-direction (N)	686
During operation	Radial load P-direction (N)	490
	Thrust load A, B-direction (N)	196

• For details of Note 1 to Note 5, refer to P.104.
• Dimensions of Driver, refer to P.32.
*1 Rotaly encoder specifications: □
*2 The product that the end of driver model designation has "E" is "positioning type".
Detail of model designation, refer to P.11.

Torque characteristics (at AC200V of power voltage <Dotted line represents the torque at 10% less supply voltage.>)

With oil seal

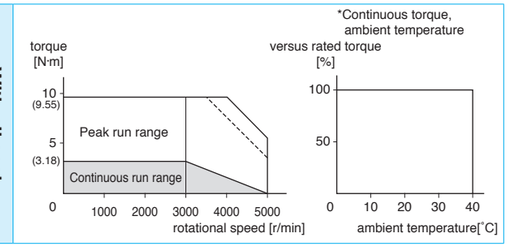

Dimensions

Mass (kg)/ Without brake: 3.5
With brake: 4.5

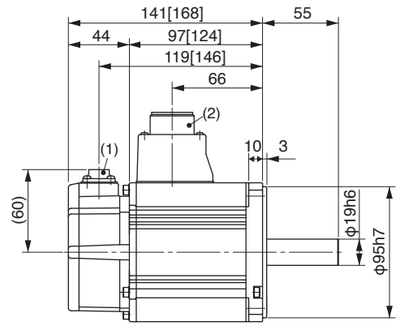

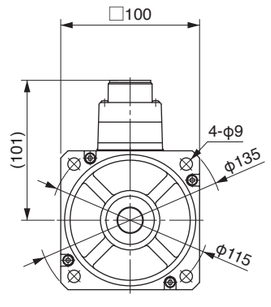

Key way dimensions

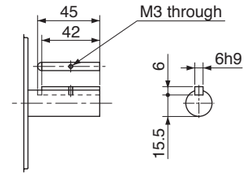

(1) Encoder connector
(2) Motor/Brake connector

* Figures in [ ] represent the dimensions of with brake.

<Cautions> Reduce the moment of inertia ratio if high speed response operation is required.
Dimensions are subject to change without notice. Contact us or a dealer for the latest information.
Read the Instruction Manual carefully and understand all precautions and remarks before using the products.

Motor Specifications 200V MSME 1.5kW [Low inertia, Middle capacity]

Specifications

			AC200V	
Motor model *1		MSME	152G1□	152S1□
Applicable driver *2	Model No.	A5 series	MDDHT5540	
		A5E series	MDDHT5540E	
	Frame symbol		D-frame	
Power supply capacity (kVA)			2.3	
Rated output (W)			1.5	
Rated torque (N·m)			4.77	
Momentary Max. peak torque (N·m)			14.3	
Rated current (A(rms))			8.2	
Max. current (A(o-p))			35	
Regenerative brake frequency (times/min) Note)1	Without option		No limit Note)2	
	DV0P4284		No limit Note)2	
Rated rotational speed (r/min)			3000	
Max. rotational speed (r/min)			5000	
Moment of inertia of rotor ($\times 10^{-4}$kg·m^2)	Without brake		2.84	
	With brake		3.17	
Recommended moment of inertia ratio of the load and the rotor Note)3			15 times or less	
Rotary encoder specifications Note)5			20-bit Incremental	17-bit Absolute
	Resolution per single turn		1,048,576	131,072

• **Brake specifications** (For details, refer to P.105)
(This brake will be released when it is energized.
Do not use this for braking the motor in motion.)

Static friction torque (N·m)	7.8 or more
Engaging time (ms)	50 or less
Releasing time (ms) Note)4	15 or less
Exciting current (DC) (A)	0.81±10%
Releasing voltage (DC) (V)	2 or more
Exciting voltage (DC) (V)	24±2.4

• **Permissible load** (For details, refer to P.104)

During assembly	Radial load P-direction (N)	980
	Thrust load A-direction (N)	588
	Thrust load B-direction (N)	686
During operation	Radial load P-direction (N)	490
	Thrust load A, B-direction (N)	196

• For details of Note 1 to Note 5, refer to P.104.
• Dimensions of Driver, refer to P.32.
*1 Rotaly encoder specifications: □
*2 The product that the end of driver model designation has "E" is "positioning type".
Detail of model designation, refer to P.11.

Torque characteristics (at AC200V of power voltage <Dotted line represents the torque at 10% less supply voltage.>)

With oil seal

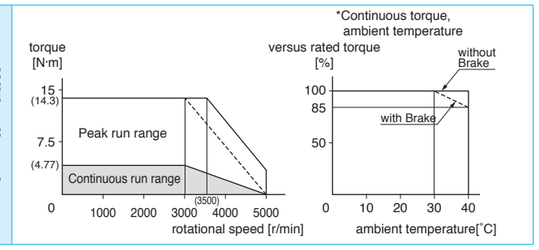

Dimensions

Mass (kg)/ Without brake: 4.4
With brake: 5.4

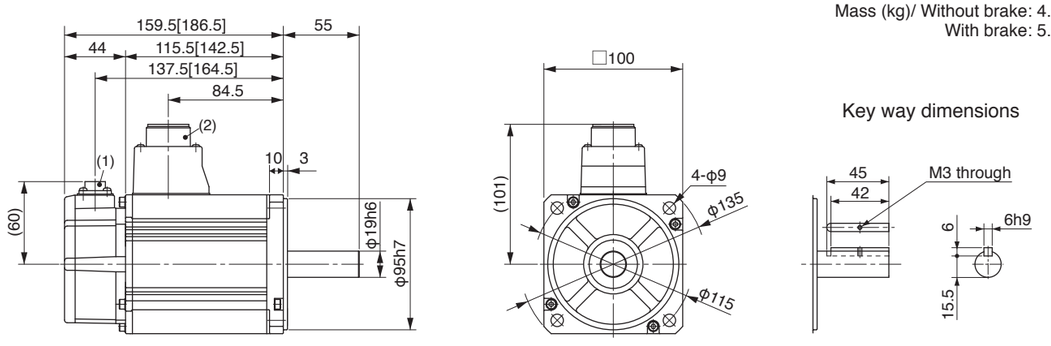

(1) Encoder connector
(2) Motor/Brake connector

* Figures in [ ] represent the dimensions of with brake.

<Cautions> Reduce the moment of inertia ratio if high speed response operation is required.
Dimensions are subject to change without notice. Contact us or a dealer for the latest information.
Read the Instruction Manual carefully and understand all precautions and remarks before using the products.

Motor Specifications 200V MSME 2.0kW [Low inertia, Middle capacity]

Specifications

			AC200V	
Motor model *1		MSME	202G1□	202S1□
Applicable driver *2	Model No.	A5 series	MEDHT7364	
		A5E series	MEDHT7364E	
	Frame symbol		E-frame	
Power supply capacity (kVA)			3.3	
Rated output (W)			2.0	
Rated torque (N·m)			6.37	
Momentary Max. peak torque (N·m)			19.1	
Rated current (A(rms))			11.3	
Max. current (A(o-p))			48	
Regenerative brake frequency (times/min) Note)1	Without option		No limit Note)2	
	DV0P4285		No limit Note)2	
Rated rotational speed (r/min)			3000	
Max. rotational speed (r/min)			5000	
Moment of inertia of rotor ($\times 10^{-4}$kg·m^2)	Without brake		3.68	
	With brake		4.01	
Recommended moment of inertia ratio of the load and the rotor Note)3			15 times or less	
Rotary encoder specifications Note)5			20-bit Incremental	17-bit Absolute
	Resolution per single turn		1,048,576	131,072

• **Brake specifications** (For details, refer to P.105)
(This brake will be released when it is energized.
Do not use this for braking the motor in motion.)

Static friction torque (N·m)	7.8 or more
Engaging time (ms)	50 or less
Releasing time (ms) Note)4	15 or less
Exciting current (DC) (A)	0.81±10%
Releasing voltage (DC) (V)	2 or more
Exciting voltage (DC) (V)	24±2.4

• **Permissible load** (For details, refer to P.104)

During assembly	Radial load P-direction (N)	980
	Thrust load A-direction (N)	588
	Thrust load B-direction (N)	686
During operation	Radial load P-direction (N)	490
	Thrust load A, B-direction (N)	196

• For details of Note 1 to Note 5, refer to P.104.
• Dimensions of Driver, refer to P.33.
*1 Rotaly encoder specifications: □
*2 The product that the end of driver model designation has "E" is "positioning type".
Detail of model designation, refer to P.11.

Torque characteristics (at AC200V of power voltage <Dotted line represents the torque at 10% less supply voltage.>)

With oil seal

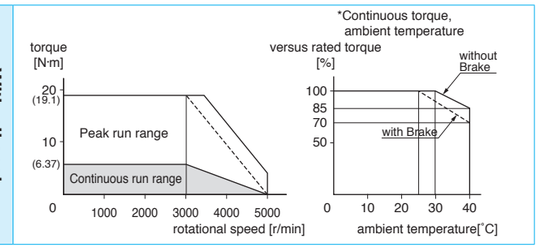

Dimensions

Mass (kg)/ Without brake: 5.3
With brake: 6.3

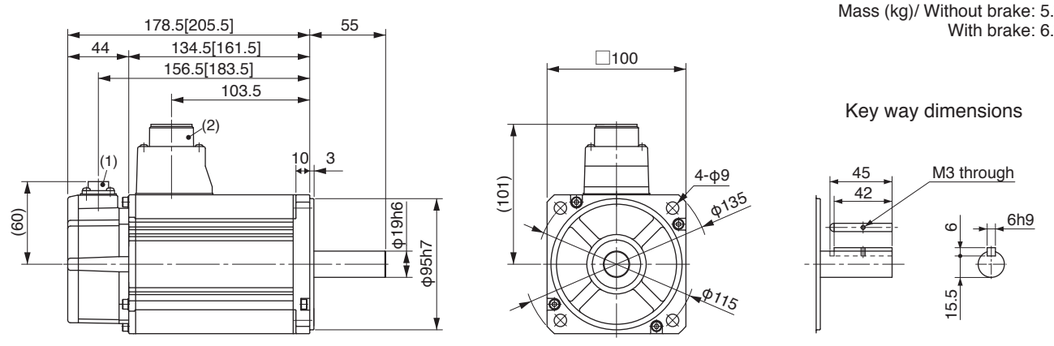

(1) Encoder connector
(2) Motor/Brake connector

* Figures in [ ] represent the dimensions of with brake.

<Cautions> Reduce the moment of inertia ratio if high speed response operation is required.
Dimensions are subject to change without notice. Contact us or a dealer for the latest information.
Read the Instruction Manual carefully and understand all precautions and remarks before using the products.

Motor Specifications 200V MSME 3.0kW [Low inertia, Middle capacity]

Specifications

		AC200V	
Motor model *1	MSME	302G1□	302S1□
Applicable driver *2	Model No. A5 series	MFDHTA390	
	Model No. A5E series	MFDHTA390E	
	Frame symbol	F-frame	
Power supply capacity (kVA)		4.5	
Rated output (W)		3.0	
Rated torque (N·m)		9.55	
Momentary Max. peak torque (N·m)		28.6	
Rated current (A(rms))		18.1	
Max. current (A(o-p))		77	
Regenerative brake frequency (times/min) Note)1	Without option	No limit Note)2	
	DV0P4285×2	No limit Note)2	
Rated rotational speed (r/min)		3000	
Max. rotational speed (r/min)		5000	
Moment of inertia of rotor ($\times10^{-4}$kg·m^2)	Without brake	6.50	
	With brake	7.85	
Recommended moment of inertia ratio of the load and the rotor Note)3		15 times or less	
Rotary encoder specifications Note)5		20-bit Incremental	17-bit Absolute
	Resolution per single turn	1,048,576	131,072

• **Brake specifications** (For details, refer to P.105)
(This brake will be released when it is energized. Do not use this for braking the motor in motion.)

Static friction torque (N·m)	11.8 or more
Engaging time (ms)	80 or less
Releasing time (ms) Note)4	15 or less
Exciting current (DC) (A)	0.81±10%
Releasing voltage (DC) (V)	2 or more
Exciting voltage (DC) (V)	24±2.4

• **Permissible load** (For details, refer to P.104)

During assembly	Radial load P-direction (N)	980
	Thrust load A-direction (N)	588
	Thrust load B-direction (N)	686
During operation	Radial load P-direction (N)	490
	Thrust load A, B-direction (N)	196

• For details of Note 1 to Note 5, refer to P.104.
• Dimensions of Driver, refer to P.34.
*1 Rotaly encoder specifications: □
*2 The product that the end of driver model designation has "E" is "positioning type".
Detail of model designation, refer to P.11.

Torque characteristics (at AC200V of power voltage <Dotted line represents the torque at 10% less supply voltage.>)

With oil seal

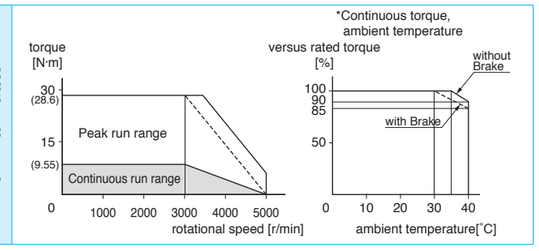

Dimensions

Mass (kg)/ Without brake: 8.3
With brake: 9.4

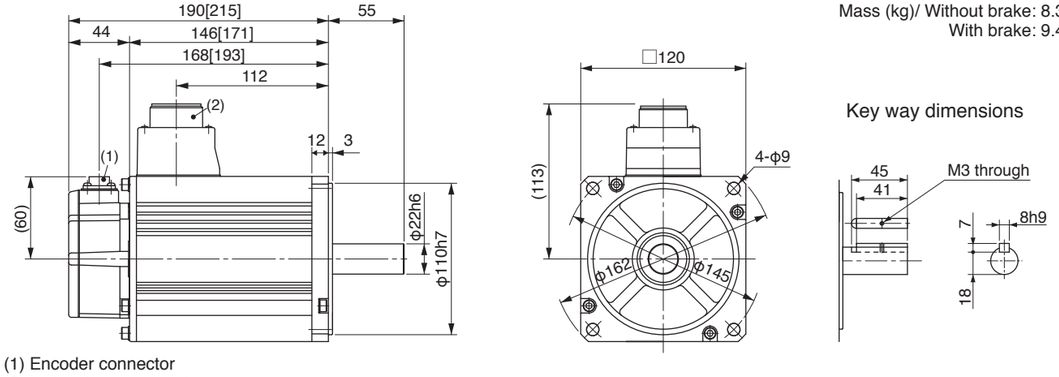

(1) Encoder connector
(2) Motor/Brake connector

* Figures in [ ] represent the dimensions of with brake.

<Cautions> Reduce the moment of inertia ratio if high speed response operation is required.
Dimensions are subject to change without notice. Contact us or a dealer for the latest information.
Read the Instruction Manual carefully and understand all precautions and remarks before using the products.

Motor Specifications 200V MSME 4.0kW [Low inertia, Middle capacity]

Specifications

		AC200V	
Motor model *1	MSME	402G1□	402S1□
Applicable driver *2	Model No. A5 series	MFDHTB3A2	
	Model No. A5E series	MFDHTB3A2E	
	Frame symbol	F-frame	
Power supply capacity (kVA)		6.0	
Rated output (W)		4.0	
Rated torque (N·m)		12.7	
Momentary Max. peak torque (N·m)		38.2	
Rated current (A(rms))		19.6	
Max. current (A(o-p))		83	
Regenerative brake frequency (times/min) Note)1	Without option	No limit Note)2	
	DV0P4285×2	No limit Note)2	
Rated rotational speed (r/min)		3000	
Max. rotational speed (r/min)		4500	
Moment of inertia of rotor ($\times10^{-4}$kg·m^2)	Without brake	12.9	
	With brake	14.2	
Recommended moment of inertia ratio of the load and the rotor Note)3		15 times or less	
Rotary encoder specifications Note)5		20-bit Incremental	17-bit Absolute
	Resolution per single turn	1,048,576	131,072

• **Brake specifications** (For details, refer to P.105)
(This brake will be released when it is energized. Do not use this for braking the motor in motion.)

Static friction torque (N·m)	16.1 or more
Engaging time (ms)	110 or less
Releasing time (ms) Note)4	50 or less
Exciting current (DC) (A)	0.90±10%
Releasing voltage (DC) (V)	2 or more
Exciting voltage (DC) (V)	24±2.4

• **Permissible load** (For details, refer to P.104)

During assembly	Radial load P-direction (N)	980
	Thrust load A-direction (N)	588
	Thrust load B-direction (N)	686
During operation	Radial load P-direction (N)	784
	Thrust load A, B-direction (N)	343

• For details of Note 1 to Note 5, refer to P.104.
• Dimensions of Driver, refer to P.34.
*1 Rotaly encoder specifications: □
*2 The product that the end of driver model designation has "E" is "positioning type".
Detail of model designation, refer to P.11.

Torque characteristics (at AC200V of power voltage <Dotted line represents the torque at 10% less supply voltage.>)

With oil seal

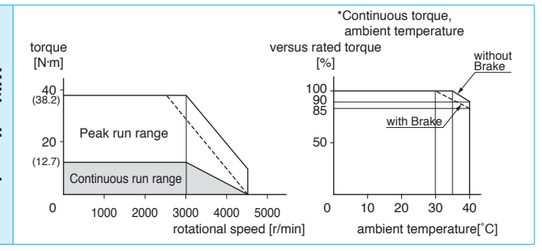

Dimensions

Mass (kg)/ Without brake: 11.0
With brake: 12.6

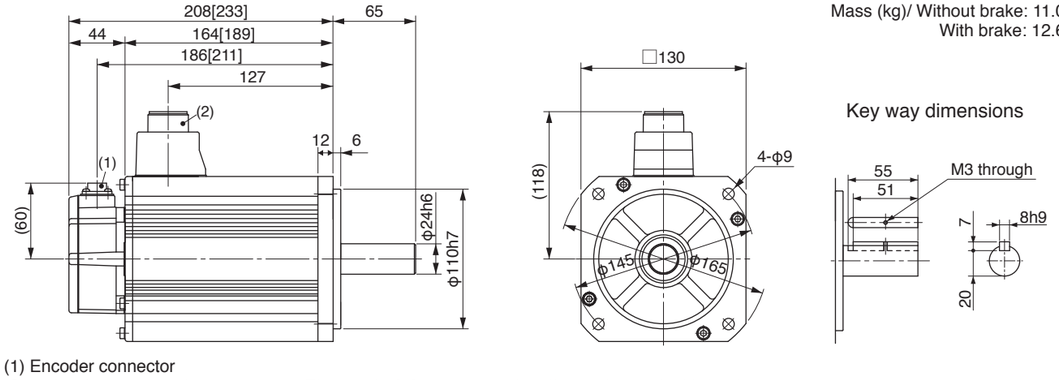

(1) Encoder connector
(2) Motor/Brake connector

* Figures in [ ] represent the dimensions of with brake.

<Cautions> Reduce the moment of inertia ratio if high speed response operation is required.
Dimensions are subject to change without notice. Contact us or a dealer for the latest information.
Read the Instruction Manual carefully and understand all precautions and remarks before using the products.

Motor Specifications 200V MSME 5.0kW [Low inertia, Middle capacity]

Specifications

			AC200V	
Motor model *1		MSME	502G1□	502S1□
Applicable driver *2	Model No.	A5 series	MFDHTB3A2	
		A5E series	MFDHTB3A2E	
	Frame symbol		F-frame	
Power supply capacity		(kVA)	7.5	
Rated output		(W)	5.0	
Rated torque		(N·m)	15.9	
Momentary Max. peak torque		(N·m)	47.7	
Rated current		(A(rms))	24.0	
Max. current		(A(o-p))	102	
Regenerative brake frequency (times/min) Note)1	Without option		357	
	DV0P4285×2		No limit Note)2	
Rated rotational speed		(r/min)	3000	
Max. rotational speed		(r/min)	4500	
Moment of inertia of rotor ($\times10^{-4}$kg·m^2)	Without brake		17.4	
	With brake		18.6	
Recommended moment of inertia ratio of the load and the rotor Note)3			15 times or less	
Rotary encoder specifications Note)5			20-bit Incremental	17-bit Absolute
	Resolution per single turn		1,048,576	131,072

• **Brake specifications** (For details, refer to P.105)
(This brake will be released when it is energized.
Do not use this for braking the motor in motion.)

Static friction torque (N·m)	16.1 or more
Engaging time (ms)	110 or less
Releasing time (ms) Note)4	50 or less
Exciting current (DC) (A)	0.90±10%
Releasing voltage (DC) (V)	2 or more
Exciting voltage (DC) (V)	24±2.4

• **Permissible load** (For details, refer to P.104)

During assembly	Radial load P-direction (N)	980
	Thrust load A-direction (N)	588
	Thrust load B-direction (N)	686
During operation	Radial load P-direction (N)	784
	Thrust load A, B-direction (N)	343

• For details of Note 1 to Note 5, refer to P.104.
• Dimensions of Driver, refer to P.34.
*1 Rotaly encoder specifications: □
*2 The product that the end of driver model designation has "E" is "positioning type".
Detail of model designation, refer to P.11.

Torque characteristics (at AC200V of power voltage <Dotted line represents the torque at 10% less supply voltage.>)

With oil seal

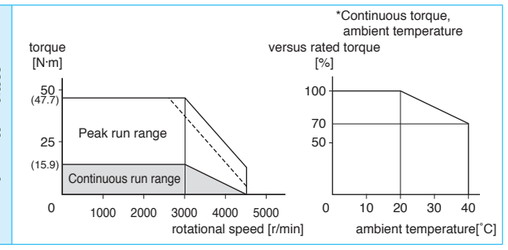

Dimensions

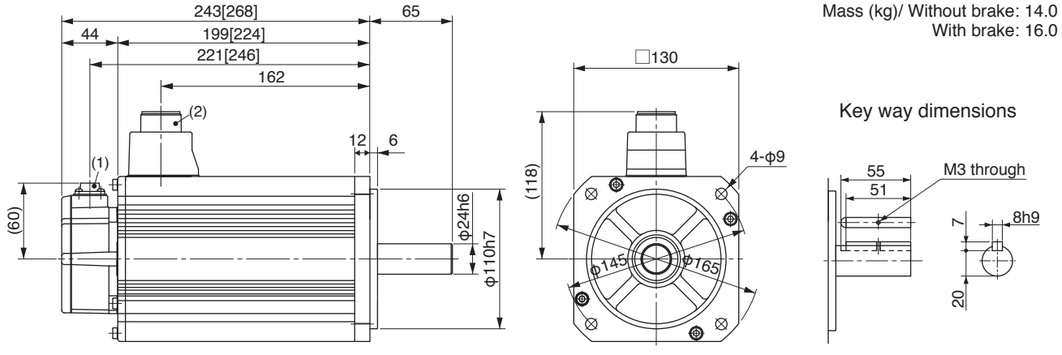

Mass (kg)/ Without brake: 14.0
With brake: 16.0

Key way dimensions

(1) Encoder connector
(2) Motor/Brake connector

* Figures in [ ] represent the dimensions of with brake.

<Cautions> Reduce the moment of inertia ratio if high speed response operation is required.
Dimensions are subject to change without notice. Contact us or a dealer for the latest information.
Read the Instruction Manual carefully and understand all precautions and remarks before using the products.

Motor Specifications 200V MDME 1.0kW [Middle inertia, Middle capacity]

Specifications

			AC200V	
Motor model *1		MDME	102G1□	102S1□
Applicable driver *2	Model No.	A5 series	MDDHT3530	
		A5E series	MDDHT3530E	
	Frame symbol		D-frame	
Power supply capacity		(kVA)	1.8	
Rated output		(W)	1.0	
Rated torque		(N·m)	4.77	
Momentary Max. peak torque		(N·m)	14.3	
Rated current		(A(rms))	5.7	
Max. current		(A(o-p))	24	
Regenerative brake frequency (times/min) Note)1	Without option		No limit Note)2	
	DV0P4284		No limit Note)2	
Rated rotational speed		(r/min)	2000	
Max. rotational speed		(r/min)	3000	
Moment of inertia of rotor ($\times10^{-4}$kg·m^2)	Without brake		4.60	
	With brake		5.90	
Recommended moment of inertia ratio of the load and the rotor Note)3			10 times or less	
Rotary encoder specifications Note)5			20-bit Incremental	17-bit Absolute
	Resolution per single turn		1,048,576	131,072

• **Brake specifications** (For details, refer to P.105)
(This brake will be released when it is energized.
Do not use this for braking the motor in motion.)

Static friction torque (N·m)	4.9 or more
Engaging time (ms)	80 or less
Releasing time (ms) Note)4	70 or less
Exciting current (DC) (A)	0.59±10%
Releasing voltage (DC) (V)	2 or more
Exciting voltage (DC) (V)	24±2.4

• **Permissible load** (For details, refer to P.104)

During assembly	Radial load P-direction (N)	980
	Thrust load A-direction (N)	588
	Thrust load B-direction (N)	686
During operation	Radial load P-direction (N)	490
	Thrust load A, B-direction (N)	196

• For details of Note 1 to Note 5, refer to P.104.
• Dimensions of Driver, refer to P.32.
*1 Rotaly encoder specifications: □
*2 The product that the end of driver model designation has "E" is "positioning type".
Detail of model designation, refer to P.11.

Torque characteristics (at AC200V of power voltage <Dotted line represents the torque at 10% less supply voltage.>)

With oil seal

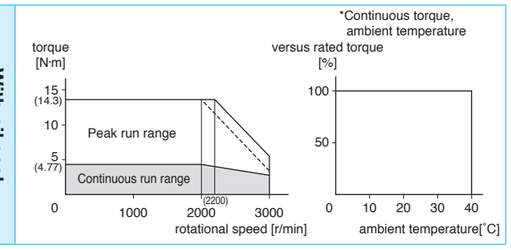

Dimensions

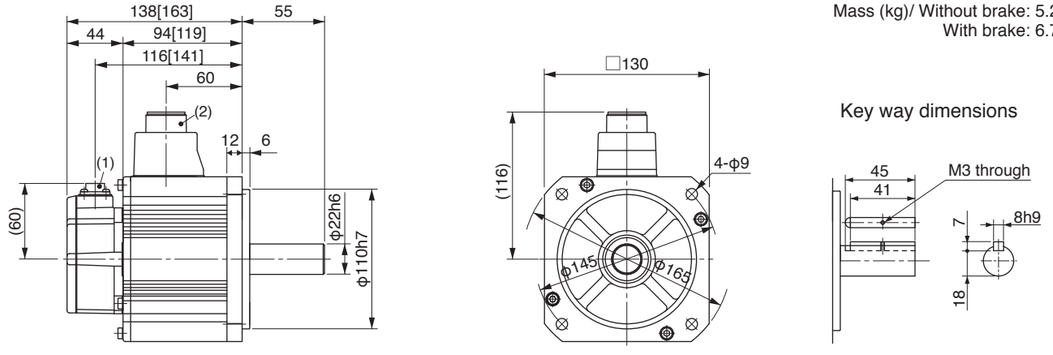

Mass (kg)/ Without brake: 5.2
With brake: 6.7

Key way dimensions

(1) Encoder connector
(2) Motor/Brake connector

* Figures in [ ] represent the dimensions of with brake.

<Cautions> Reduce the moment of inertia ratio if high speed response operation is required.
Dimensions are subject to change without notice. Contact us or a dealer for the latest information.
Read the Instruction Manual carefully and understand all precautions and remarks before using the products.

Motor Specifications 200V MDME 1.5kW [Middle inertia, Middle capacity]

Specifications

		AC200V	
Motor model *1	MDME	152G1□	152S1□
Applicable driver *2	Model No. A5 series	MDDHT5540	
	Model No. A5E series	MDDHT5540E	
	Frame symbol	D-frame	
Power supply capacity (kVA)		2.3	
Rated output (W)		1.5	
Rated torque (N·m)		7.16	
Momentary Max. peak torque (N·m)		21.5	
Rated current (A(rms))		9.4	
Max. current (A(o-p))		40	
Regenerative brake frequency (times/min) Note)1	Without option	No limit Note)2	
	DV0P4284	No limit Note)2	
Rated rotational speed (r/min)		2000	
Max. rotational speed (r/min)		3000	
Moment of inertia of rotor ($\times10^{-4}$kg·m^2)	Without brake	6.70	
	With brake	7.99	
Recommended moment of inertia ratio of the load and the rotor Note)3		10 times or less	
Rotary encoder specifications Note)5		20-bit Incremental	17-bit Absolute
	Resolution per single turn	1,048,576	131,072

• **Brake specifications** (For details, refer to P.105)
(This brake will be released when it is energized.
Do not use this for braking the motor in motion.)

Static friction torque (N·m)	13.7 or more
Engaging time (ms)	100 or less
Releasing time (ms) Note)4	50 or less
Exciting current (DC) (A)	0.79±10%
Releasing voltage (DC) (V)	2 or more
Exciting voltage (DC) (V)	24±2.4

• **Permissible load** (For details, refer to P.104)

During assembly	Radial load P-direction (N)	980
	Thrust load A-direction (N)	588
	Thrust load B-direction (N)	686
During operation	Radial load P-direction (N)	490
	Thrust load A, B-direction (N)	196

• For details of Note 1 to Note 5, refer to P.104.
• Dimensions of Driver, refer to P.32.
*1 Rotaly encoder specifications: □
*2 The product that the end of driver model designation has "E" is "positioning type".
Detail of model designation, refer to P.11.

Torque characteristics (at AC200V of power voltage <Dotted line represents the torque at 10% less supply voltage.>)

With oil seal

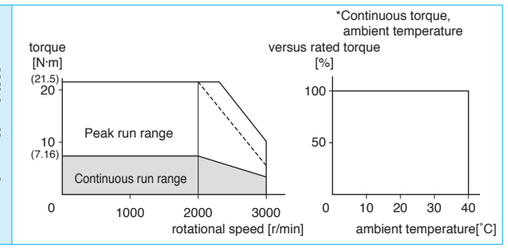

Dimensions

Mass (kg)/ Without brake: 6.7
With brake: 8.2

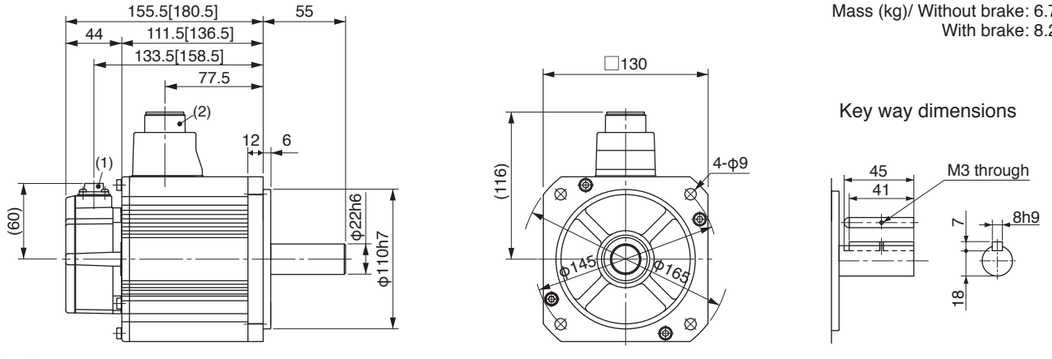

(1) Encoder connector
(2) Motor/Brake connector

* Figures in [ ] represent the dimensions of with brake.

<Cautions> Reduce the moment of inertia ratio if high speed response operation is required.
Dimensions are subject to change without notice. Contact us or a dealer for the latest information.
Read the Instruction Manual carefully and understand all precautions and remarks before using the products.

Motor Specifications 200V MDME 2.0kW [Middle inertia, Middle capacity]

Specifications

		AC200V	
Motor model *1	MDME	202G1□	202S1□
Applicable driver *2	Model No. A5 series	MEDHT7364	
	Model No. A5E series	MEDHT7364E	
	Frame symbol	E-frame	
Power supply capacity (kVA)		3.3	
Rated output (W)		2.0	
Rated torque (N·m)		9.55	
Momentary Max. peak torque (N·m)		28.6	
Rated current (A(rms))		11.5	
Max. current (A(o-p))		49	
Regenerative brake frequency (times/min) Note)1	Without option	No limit Note)2	
	DV0P4285	No limit Note)2	
Rated rotational speed (r/min)		2000	
Max. rotational speed (r/min)		3000	
Moment of inertia of rotor ($\times10^{-4}$kg·m^2)	Without brake	8.72	
	With brake	10.0	
Recommended moment of inertia ratio of the load and the rotor Note)3		10 times or less	
Rotary encoder specifications Note)5		20-bit Incremental	17-bit Absolute
	Resolution per single turn	1,048,576	131,072

• **Brake specifications** (For details, refer to P.105)
(This brake will be released when it is energized.
Do not use this for braking the motor in motion.)

Static friction torque (N·m)	13.7 or more
Engaging time (ms)	100 or less
Releasing time (ms) Note)4	50 or less
Exciting current (DC) (A)	0.79±10%
Releasing voltage (DC) (V)	2 or more
Exciting voltage (DC) (V)	24±2.4

• **Permissible load** (For details, refer to P.104)

During assembly	Radial load P-direction (N)	980
	Thrust load A-direction (N)	588
	Thrust load B-direction (N)	686
During operation	Radial load P-direction (N)	490
	Thrust load A, B-direction (N)	196

• For details of Note 1 to Note 5, refer to P.104.
• Dimensions of Driver, refer to P.33.
*1 Rotaly encoder specifications: □
*2 The product that the end of driver model designation has "E" is "positioning type".
Detail of model designation, refer to P.11.

Torque characteristics (at AC200V of power voltage <Dotted line represents the torque at 10% less supply voltage.>)

With oil seal

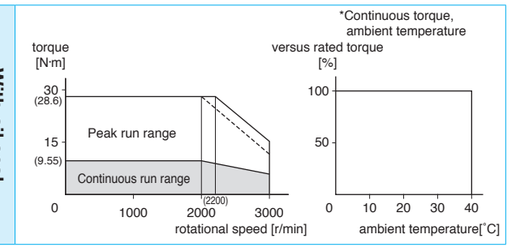

Dimensions

Mass (kg)/ Without brake: 8.0
With brake: 9.5

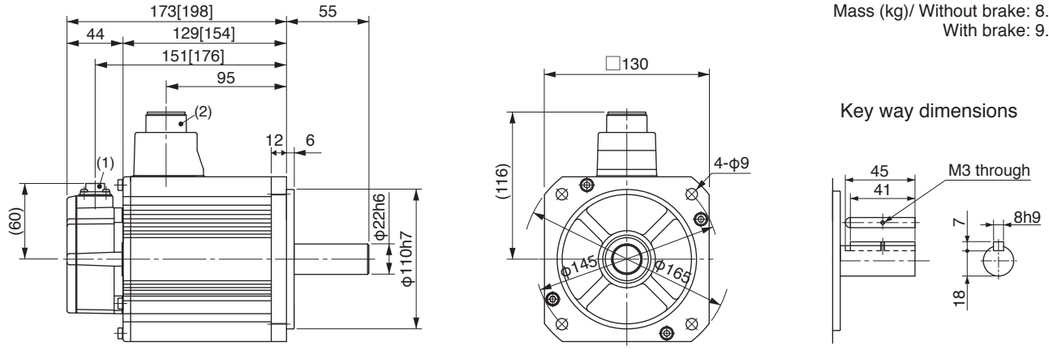

(1) Encoder connector
(2) Motor/Brake connector

* Figures in [ ] represent the dimensions of with brake.

<Cautions> Reduce the moment of inertia ratio if high speed response operation is required.
Dimensions are subject to change without notice. Contact us or a dealer for the latest information.
Read the Instruction Manual carefully and understand all precautions and remarks before using the products.

Motor Specifications 200V MDME 3.0kW [Middle inertia, Middle capacity]

Specifications

		AC200V	
Motor model *1	MDME	302G1□	302S1□
Applicable driver *2	Model No. A5 series	MFDHTA390	
	Model No. A5E series	MFDHTA390E	
	Frame symbol	F-frame	
Power supply capacity (kVA)		4.5	
Rated output (W)		3.0	
Rated torque (N·m)		14.3	
Momentary Max. peak torque (N·m)		43.0	
Rated current (A(rms))		17.4	
Max. current (A(o-p))		74	
Regenerative brake frequency (times/min) Note)1	Without option	No limit Note)2	
	DV0P4285×2	No limit Note)2	
Rated rotational speed (r/min)		2000	
Max. rotational speed (r/min)		3000	
Moment of inertia of rotor ($\times 10^{-4}$kg·m^2)	Without brake	12.9	
	With brake	14.2	
Recommended moment of inertia ratio of the load and the rotor Note)3		10 times or less	
Rotary encoder specifications Note)5		20-bit Incremental	17-bit Absolute
	Resolution per single turn	1,048,576	131,072

• **Brake specifications** (For details, refer to P.105)
(This brake will be released when it is energized. Do not use this for braking the motor in motion.)

Static friction torque (N·m)	16.2 or more
Engaging time (ms)	110 or less
Releasing time (ms) Note)4	50 or less
Exciting current (DC) (A)	0.90±10%
Releasing voltage (DC) (V)	2 or more
Exciting voltage (DC) (V)	24±2.4

• **Permissible load** (For details, refer to P.104)

During assembly	Radial load P-direction (N)	980
	Thrust load A-direction (N)	588
	Thrust load B-direction (N)	686
During operation	Radial load P-direction (N)	784
	Thrust load A, B-direction (N)	343

• For details of Note 1 to Note 5, refer to P.104.
• Dimensions of Driver, refer to P.34.
*1 Rotaly encoder specifications: □
*2 The product that the end of driver model designation has "E" is "positioning type".
Detail of model designation, refer to P.11.

Torque characteristics (at AC200V of power voltage <Dotted line represents the torque at 10% less supply voltage.>)

With oil seal

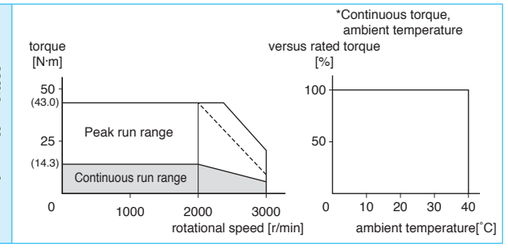

Dimensions

Mass (kg)/ Without brake: 11.0
With brake: 12.6

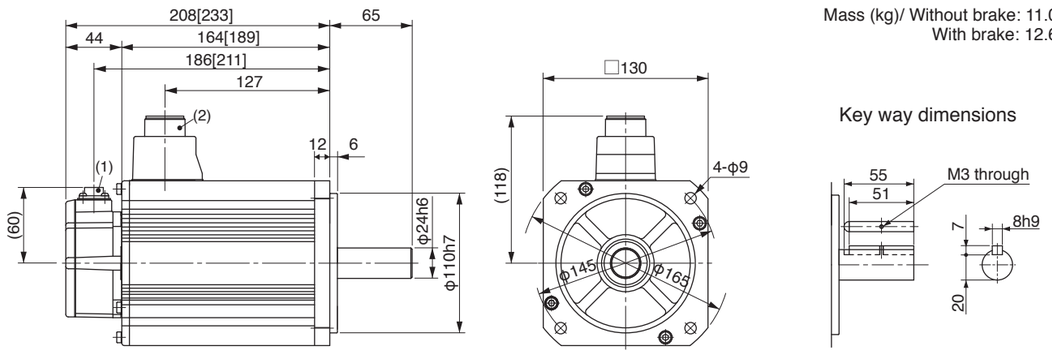

(1) Encoder connector
(2) Motor/Brake connector

* Figures in [ ] represent the dimensions of with brake.

<Cautions> Reduce the moment of inertia ratio if high speed response operation is required.
Dimensions are subject to change without notice. Contact us or a dealer for the latest information.
Read the Instruction Manual carefully and understand all precautions and remarks before using the products.

Motor Specifications 200V MDME 4.0kW [Middle inertia, Middle capacity]

Specifications

		AC200V	
Motor model *1	MDME	402G1□	402S1□
Applicable driver *2	Model No. A5 series	MFDHTB3A2	
	Model No. A5E series	MFDHTB3A2E	
	Frame symbol	F-frame	
Power supply capacity (kVA)		6.0	
Rated output (W)		4.0	
Rated torque (N·m)		19.1	
Momentary Max. peak torque (N·m)		57.3	
Rated current (A(rms))		21.0	
Max. current (A(o-p))		89	
Regenerative brake frequency (times/min) Note)1	Without option	No limit Note)2	
	DV0P4285×2	No limit Note)2	
Rated rotational speed (r/min)		2000	
Max. rotational speed (r/min)		3000	
Moment of inertia of rotor ($\times 10^{-4}$kg·m^2)	Without brake	37.6	
	With brake	38.6	
Recommended moment of inertia ratio of the load and the rotor Note)3		10 times or less	
Rotary encoder specifications Note)5		20-bit Incremental	17-bit Absolute
	Resolution per single turn	1,048,576	131,072

• **Brake specifications** (For details, refer to P.105)
(This brake will be released when it is energized. Do not use this for braking the motor in motion.)

Static friction torque (N·m)	24.5 or more
Engaging time (ms)	80 or less
Releasing time (ms) Note)4	25 or less
Exciting current (DC) (A)	1.3±10%
Releasing voltage (DC) (V)	2 or more
Exciting voltage (DC) (V)	24±2.4

• **Permissible load** (For details, refer to P.104)

During assembly	Radial load P-direction (N)	1666
	Thrust load A-direction (N)	784
	Thrust load B-direction (N)	980
During operation	Radial load P-direction (N)	784
	Thrust load A, B-direction (N)	343

• For details of Note 1 to Note 5, refer to P.104.
• Dimensions of Driver, refer to P.34.
*1 Rotaly encoder specifications: □
*2 The product that the end of driver model designation has "E" is "positioning type".
Detail of model designation, refer to P.11.

Torque characteristics (at AC200V of power voltage <Dotted line represents the torque at 10% less supply voltage.>)

With oil seal

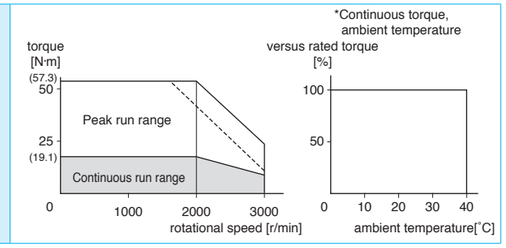

Dimensions

Mass (kg)/ Without brake: 15.5
With brake: 18.7

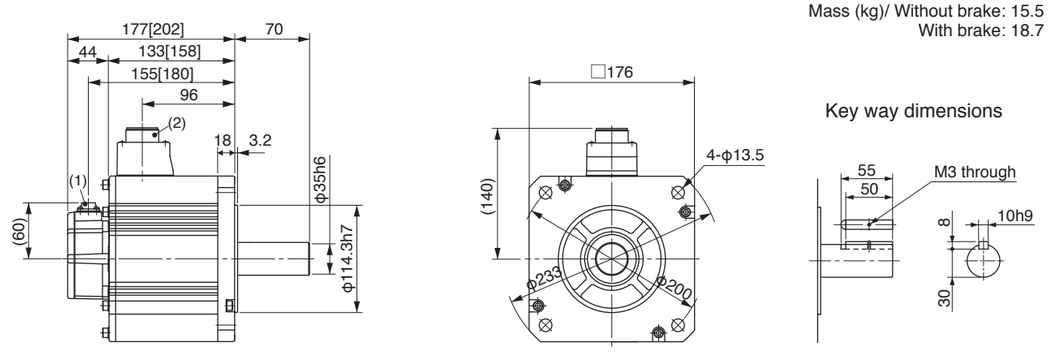

(1) Encoder connector
(2) Motor/Brake connector

* Figures in [ ] represent the dimensions of with brake.

<Cautions> Reduce the moment of inertia ratio if high speed response operation is required.
Dimensions are subject to change without notice. Contact us or a dealer for the latest information.
Read the Instruction Manual carefully and understand all precautions and remarks before using the products.

Motor Specifications 200V MDME 5.0kW [Middle inertia, Middle capacity]

Specifications

		AC200V	
Motor model *1	MDME	502G1□	502S1□
Applicable driver *2	Model No. A5 series	MFDHTB3A2	
	Model No. A5E series	MFDHTB3A2E	
	Frame symbol	F-frame	
Power supply capacity (kVA)		7.5	
Rated output (W)		5.0	
Rated torque (N·m)		23.9	
Momentary Max. peak torque (N·m)		71.6	
Rated current (A(rms))		25.9	
Max. current (A(o-p))		110	
Regenerative brake frequency (times/min) Note)1	Without option	120	
	DV0P4285×2	No limit Note)2	
Rated rotational speed (r/min)		2000	
Max. rotational speed (r/min)		3000	
Moment of inertia of rotor ($\times10^{-4}$kg·m^2)	Without brake	48.0	
	With brake	48.8	
Recommended moment of inertia ratio of the load and the rotor Note)3		10 times or less	
Rotary encoder specifications Note)5		20-bit Incremental	17-bit Absolute
	Resolution per single turn	1,048,576	131,072

• **Brake specifications** (For details, refer to P.105)
(This brake will be released when it is energized. Do not use this for braking the motor in motion.)

Static friction torque (N·m)	24.5 or more
Engaging time (ms)	80 or less
Releasing time (ms) Note)4	25 or less
Exciting current (DC) (A)	1.3±10%
Releasing voltage (DC) (V)	2 or more
Exciting voltage (DC) (V)	24±2.4

• **Permissible load** (For details, refer to P.104)

During assembly	Radial load P-direction (N)	1666
	Thrust load A-direction (N)	784
	Thrust load B-direction (N)	980
During operation	Radial load P-direction (N)	784
	Thrust load A, B-direction (N)	343

• For details of Note 1 to Note 5, refer to P.104.
• Dimensions of Driver, refer to P.34.
*1 Rotaly encoder specifications: □
*2 The product that the end of driver model designation has "E" is "positioning type".
Detail of model designation, refer to P.11.

Torque characteristics (at AC200V of power voltage <Dotted line represents the torque at 10% less supply voltage.>)

With oil seal

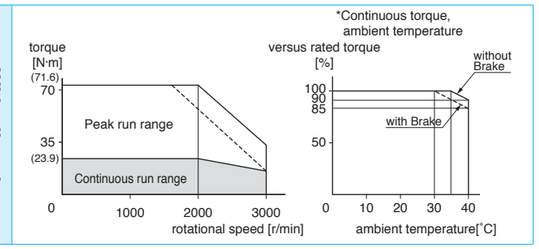

Dimensions

Mass (kg)/ Without brake: 18.6
With brake: 21.8

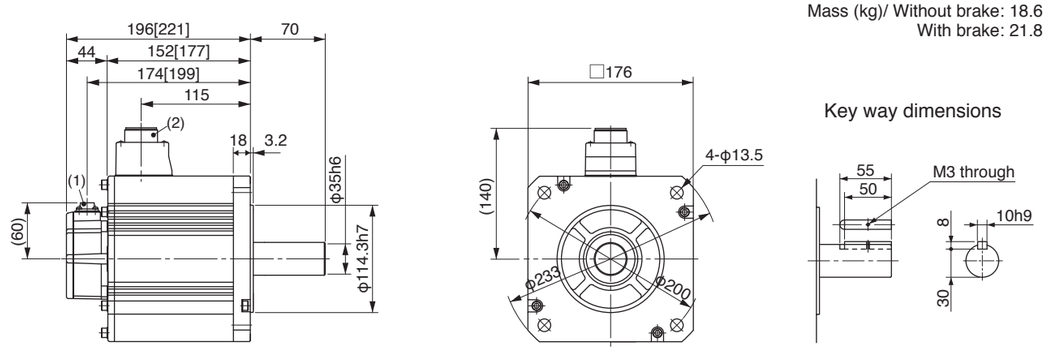

(1) Encoder connector
(2) Motor/Brake connector

* Figures in [ ] represent the dimensions of with brake.

<Cautions> Reduce the moment of inertia ratio if high speed response operation is required.
Dimensions are subject to change without notice. Contact us or a dealer for the latest information.
Read the Instruction Manual carefully and understand all precautions and remarks before using the products.

Motor Specifications 200V MGME 0.9kW [Middle inertia, Middle capacity]

Specifications

		AC200V	
Motor model *1	MGME	092G1□	092S1□
Applicable driver *2	Model No. A5 series	MDDHT5540	
	Model No. A5E series	MDDHT5540E	
	Frame symbol	D-frame	
Power supply capacity (kVA)		1.8	
Rated output (W)		0.9	
Rated torque (N·m)		8.59	
Momentary Max. peak torque (N·m)		19.3	
Rated current (A(rms))		7.6	
Max. current (A(o-p))		24	
Regenerative brake frequency (times/min) Note)1	Without option	No limit Note)2	
	DV0P4284	No limit Note)2	
Rated rotational speed (r/min)		1000	
Max. rotational speed (r/min)		2000	
Moment of inertia of rotor ($\times10^{-4}$kg·m^2)	Without brake	6.70	
	With brake	7.99	
Recommended moment of inertia ratio of the load and the rotor Note)3		10 times or less	
Rotary encoder specifications Note)5		20-bit Incremental	17-bit Absolute
	Resolution per single turn	1,048,576	131,072

• **Brake specifications** (For details, refer to P.105)
(This brake will be released when it is energized. Do not use this for braking the motor in motion.)

Static friction torque (N·m)	13.7 or more
Engaging time (ms)	100 or less
Releasing time (ms) Note)4	50 or less
Exciting current (DC) (A)	0.79±10%
Releasing voltage (DC) (V)	2 or more
Exciting voltage (DC) (V)	24±2.4

• **Permissible load** (For details, refer to P.104)

During assembly	Radial load P-direction (N)	980
	Thrust load A-direction (N)	588
	Thrust load B-direction (N)	686
During operation	Radial load P-direction (N)	686
	Thrust load A, B-direction (N)	196

• For details of Note 1 to Note 5, refer to P.104.
• Dimensions of Driver, refer to P.32.
*1 Rotaly encoder specifications: □
*2 The product that the end of driver model designation has "E" is "positioning type".
Detail of model designation, refer to P.11.

Torque characteristics (at AC200V of power voltage <Dotted line represents the torque at 10% less supply voltage.>)

With oil seal

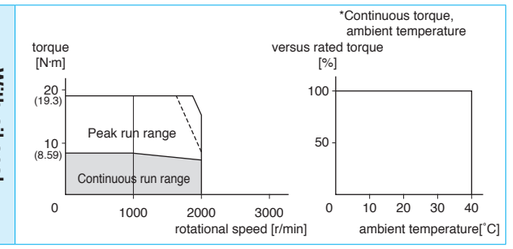

Dimensions

Mass (kg)/ Without brake: 6.7
With brake: 8.2

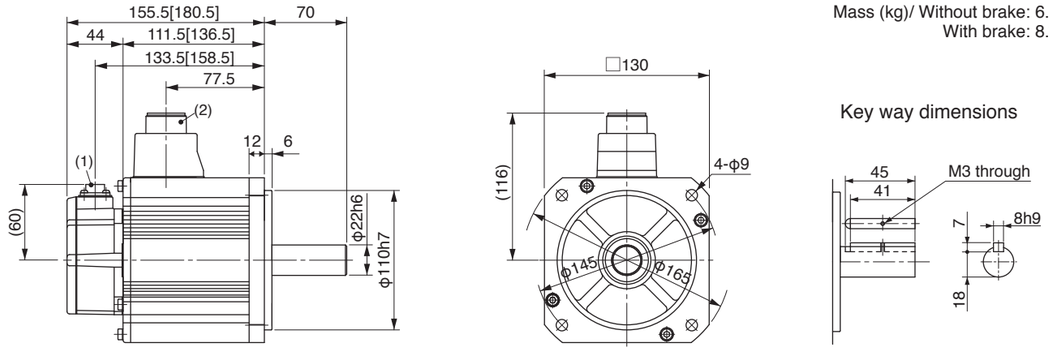

(1) Encoder connector
(2) Motor/Brake connector

* Figures in [ ] represent the dimensions of with brake.

<Cautions> Reduce the moment of inertia ratio if high speed response operation is required.
Dimensions are subject to change without notice. Contact us or a dealer for the latest information.
Read the Instruction Manual carefully and understand all precautions and remarks before using the products.

Motor Specifications 200V MGME 2.0kW [Middle inertia, Middle capacity]

Specifications

		AC200V	
Motor model *1	MGME	202G1□	202S1□
Applicable driver *2	Model No. A5 series	MFDHTA390	
	Model No. A5E series	MFDHTA390E	
	Frame symbol	F-frame	
Power supply capacity (kVA)		3.8	
Rated output (W)		2.0	
Rated torque (N·m)		19.1	
Momentary Max. peak torque (N·m)		47.7	
Rated current (A(rms))		17.0	
Max. current (A(o-p))		60	
Regenerative brake frequency (times/min) Note)1	Without option	No limit Note)2	
	DV0P4285×2	No limit Note)2	
Rated rotational speed (r/min)		1000	
Max. rotational speed (r/min)		2000	
Moment of inertia of rotor ($\times10^{-4}$kg·m^2)	Without brake	30.3	
	With brake	31.4	
Recommended moment of inertia ratio of the load and the rotor Note)3		10 times or less	
Rotary encoder specifications Note)5		20-bit Incremental	17-bit Absolute
	Resolution per single turn	1,048,576	131,072

• **Brake specifications** (For details, refer to P.105)
(This brake will be released when it is energized.
Do not use this for braking the motor in motion.)

Static friction torque (N·m)	24.5 or more
Engaging time (ms)	80 or less
Releasing time (ms) Note)4	25 or less
Exciting current (DC) (A)	1.3±10%
Releasing voltage (DC) (V)	2 or more
Exciting voltage (DC) (V)	24±2.4

• **Permissible load** (For details, refer to P.104)

During assembly	Radial load P-direction (N)	1666
	Thrust load A-direction (N)	784
	Thrust load B-direction (N)	980
During operation	Radial load P-direction (N)	1176
	Thrust load A, B-direction (N)	490

• For details of Note 1 to Note 5, refer to P.104.
• Dimensions of Driver, refer to P.34.
*1 Rotaly encoder specifications: □
*2 The product that the end of driver model designation has "E" is "positioning type".
Detail of model designation, refer to P.11.

Torque characteristics (at AC200V of power voltage <Dotted line represents the torque at 10% less supply voltage.>)

With oil seal

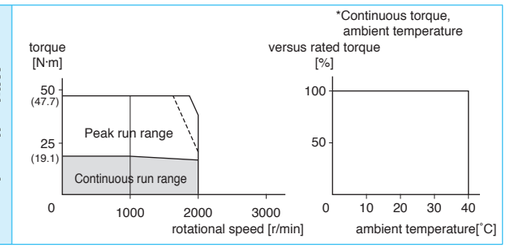

Dimensions

Mass (kg)/ Without brake: 14.0
With brake: 17.5

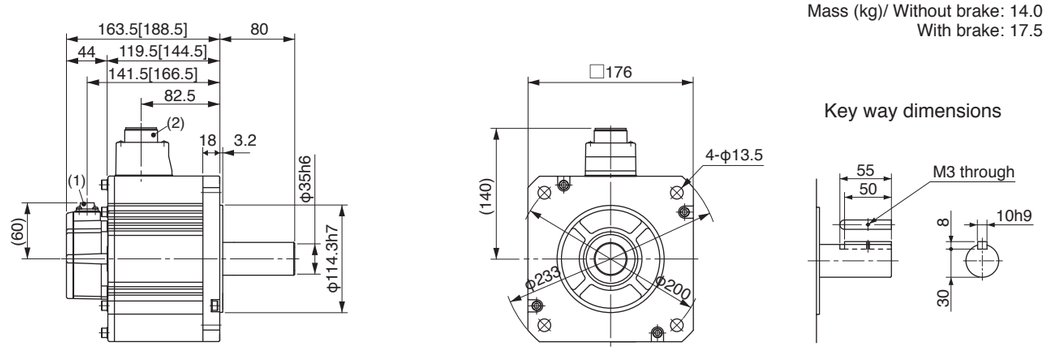

(1) Encoder connector
(2) Motor/Brake connector

* Figures in [ ] represent the dimensions of with brake.

<Cautions> Reduce the moment of inertia ratio if high speed response operation is required.
Dimensions are subject to change without notice. Contact us or a dealer for the latest information.
Read the Instruction Manual carefully and understand all precautions and remarks before using the products.

Motor Specifications 200V MGME 3.0kW [Middle inertia, Middle capacity]

Specifications

		AC200V	
Motor model *1	MGME	302G1□	302S1□
Applicable driver *2	Model No. A5 series	MFDHTB3A2	
	Model No. A5E series	MFDHTB3A2E	
	Frame symbol	F-frame	
Power supply capacity (kVA)		4.5	
Rated output (W)		3.0	
Rated torque (N·m)		28.7	
Momentary Max. peak torque (N·m)		71.7	
Rated current (A(rms))		22.6	
Max. current (A(o-p))		80	
Regenerative brake frequency (times/min) Note)1	Without option	No limit Note)2	
	DV0P4285×2	No limit Note)2	
Rated rotational speed (r/min)		1000	
Max. rotational speed (r/min)		2000	
Moment of inertia of rotor ($\times10^{-4}$kg·m^2)	Without brake	48.4	
	With brake	49.2	
Recommended moment of inertia ratio of the load and the rotor Note)3		10 times or less	
Rotary encoder specifications Note)5		20-bit Incremental	17-bit Absolute
	Resolution per single turn	1,048,576	131,072

• **Brake specifications** (For details, refer to P.105)
(This brake will be released when it is energized.
Do not use this for braking the motor in motion.)

Static friction torque (N·m)	58.8 or more
Engaging time (ms)	150 or less
Releasing time (ms) Note)4	50 or less
Exciting current (DC) (A)	1.4±10%
Releasing voltage (DC) (V)	2 or more
Exciting voltage (DC) (V)	24±2.4

• **Permissible load** (For details, refer to P.104)

During assembly	Radial load P-direction (N)	2058
	Thrust load A-direction (N)	980
	Thrust load B-direction (N)	1176
During operation	Radial load P-direction (N)	1470
	Thrust load A, B-direction (N)	490

• For details of Note 1 to Note 5, refer to P.104.
• Dimensions of Driver, refer to P.34.
*1 Rotaly encoder specifications: □
*2 The product that the end of driver model designation has "E" is "positioning type".
Detail of model designation, refer to P.11.

Torque characteristics (at AC200V of power voltage <Dotted line represents the torque at 10% less supply voltage.>)

With oil seal

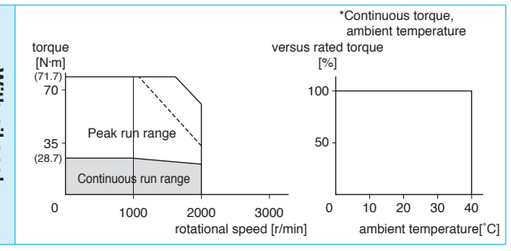

Dimensions

Mass (kg)/ Without brake: 20.0
With brake: 23.5

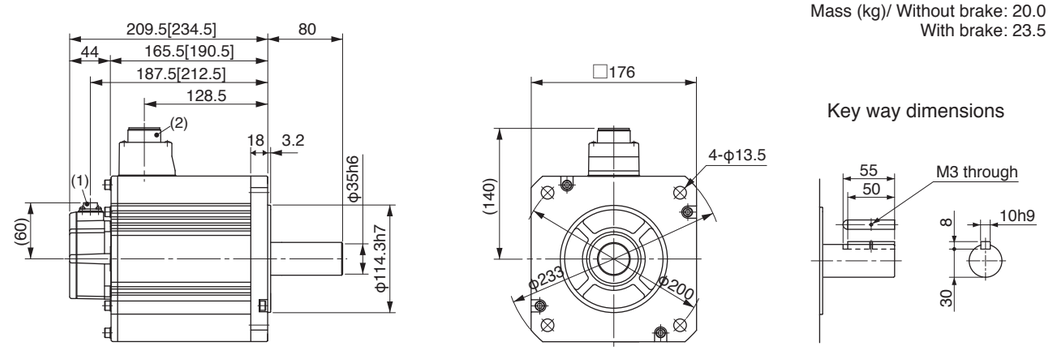

(1) Encoder connector
(2) Motor/Brake connector

* Figures in [ ] represent the dimensions of with brake.

<Cautions> Reduce the moment of inertia ratio if high speed response operation is required.
Dimensions are subject to change without notice. Contact us or a dealer for the latest information.
Read the Instruction Manual carefully and understand all precautions and remarks before using the products.

Motor Specifications 200V MHME 1.0kW [High inertia, Middle capacity]

Specifications

			AC200V	
Motor model *1		MHME	102G1□	102S1□
Applicable driver *2	Model No.	A5 series	MDDHT3530	
		A5E series	MDDHT3530E	
	Frame symbol		D-frame	
Power supply capacity (kVA)			1.8	
Rated output (W)			1.0	
Rated torque (N·m)			4.77	
Momentary Max. peak torque (N·m)			14.3	
Rated current (A(rms))			5.7	
Max. current (A(o-p))			24	
Regenerative brake frequency (times/min) Note)1	Without option		83	
	DV0P4284		No limit Note)2	
Rated rotational speed (r/min)			2000	
Max. rotational speed (r/min)			3000	
Moment of inertia of rotor ($\times10^{-4}$kg·m^2)	Without brake		24.7	
	With brake		26.0	
Recommended moment of inertia ratio of the load and the rotor Note)3			5 times or less	
Rotary encoder specifications Note)5			20-bit Incremental	17-bit Absolute
	Resolution per single turn		1,048,576	131,072

• **Brake specifications** (For details, refer to P.105)

(This brake will be released when it is energized. Do not use this for braking the motor in motion.)

Static friction torque (N·m)	4.9
Engaging time (ms)	80 or less
Releasing time (ms) Note)4	70 or less
Exciting current (DC) (A)	0.59±10%
Releasing voltage (DC) (V)	2 or more
Exciting voltage (DC) (V)	24±2.4

• **Permissible load** (For details, refer to P.104)

During assembly	Radial load P-direction (N)	980
	Thrust load A-direction (N)	588
	Thrust load B-direction (N)	686
During operation	Radial load P-direction (N)	490
	Thrust load A, B-direction (N)	196

• For details of Note 1 to Note 5, refer to P.104.
• Dimensions of Driver, refer to P.32.
*1 Rotaly encoder specifications: □
*2 The product that the end of driver model designation has "E" is "positioning type".
Detail of model designation, refer to P.11.

Torque characteristics (at AC200V of power voltage <Dotted line represents the torque at 10% less supply voltage.>)

With oil seal

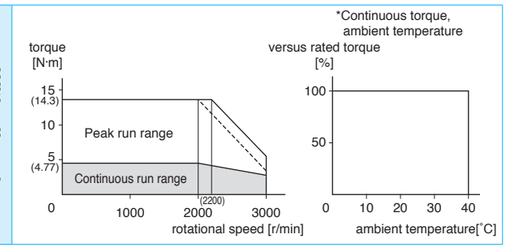

Dimensions

Mass (kg)/ Without brake: 6.7
With brake: 8.1

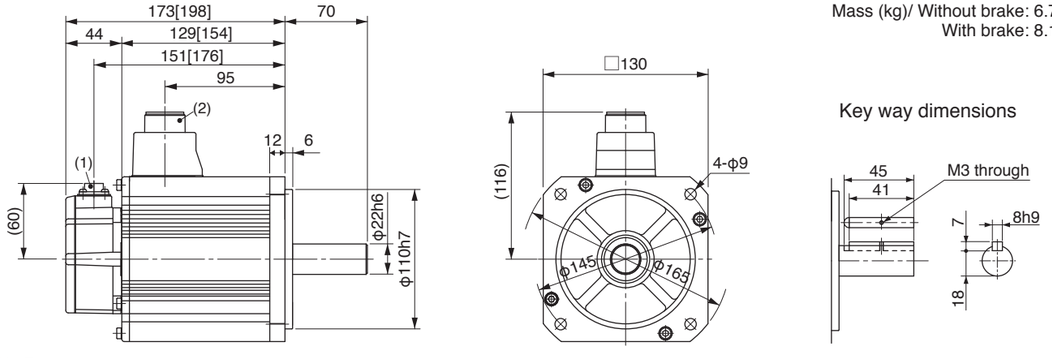

(1) Encoder connector
(2) Motor/Brake connector

* Figures in [ ] represent the dimensions of with brake.

<Cautions> Reduce the moment of inertia ratio if high speed response operation is required.
Dimensions are subject to change without notice. Contact us or a dealer for the latest information.
Read the Instruction Manual carefully and understand all precautions and remarks before using the products.

Motor Specifications 200V MHME 1.5kW [High inertia, Middle capacity]

Specifications

			AC200V	
Motor model *1		MHME	152G1□	152S1□
Applicable driver *2	Model No.	A5 series	MDDHT5540	
		A5E series	MDDHT5540E	
	Frame symbol		D-frame	
Power supply capacity (kVA)			2.3	
Rated output (W)			1.5	
Rated torque (N·m)			7.16	
Momentary Max. peak torque (N·m)			21.5	
Rated current (A(rms))			9.4	
Max. current (A(o-p))			40	
Regenerative brake frequency (times/min) Note)1	Without option		22	
	DV0P4284		130	
Rated rotational speed (r/min)			2000	
Max. rotational speed (r/min)			3000	
Moment of inertia of rotor ($\times10^{-4}$kg·m^2)	Without brake		37.1	
	With brake		38.4	
Recommended moment of inertia ratio of the load and the rotor Note)3			5 times or less	
Rotary encoder specifications Note)5			20-bit Incremental	17-bit Absolute
	Resolution per single turn		1,048,576	131,072

• **Brake specifications** (For details, refer to P.105)

(This brake will be released when it is energized. Do not use this for braking the motor in motion.)

Static friction torque (N·m)	13.7 or more
Engaging time (ms)	100 or less
Releasing time (ms) Note)4	50 or less
Exciting current (DC) (A)	0.79±10%
Releasing voltage (DC) (V)	2 or more
Exciting voltage (DC) (V)	24±2.4

• **Permissible load** (For details, refer to P.104)

During assembly	Radial load P-direction (N)	980
	Thrust load A-direction (N)	588
	Thrust load B-direction (N)	686
During operation	Radial load P-direction (N)	490
	Thrust load A, B-direction (N)	196

• For details of Note 1 to Note 5, refer to P.104.
• Dimensions of Driver, refer to P.32.
*1 Rotaly encoder specifications: □
*2 The product that the end of driver model designation has "E" is "positioning type".
Detail of model designation, refer to P.11.

Torque characteristics (at AC200V of power voltage <Dotted line represents the torque at 10% less supply voltage.>)

With oil seal

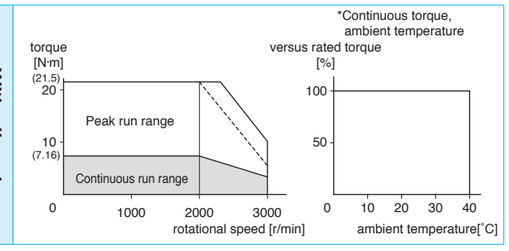

Dimensions

Mass (kg)/ Without brake: 8.6
With brake: 10.1

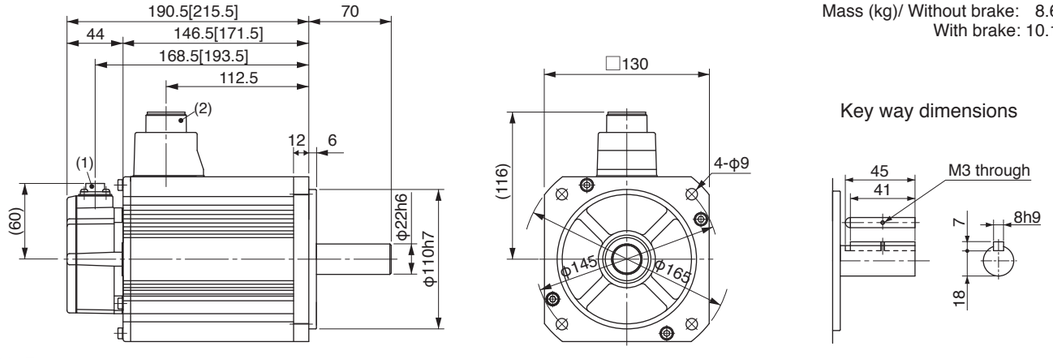

(1) Encoder connector
(2) Motor/Brake connector

* Figures in [ ] represent the dimensions of with brake.

<Cautions> Reduce the moment of inertia ratio if high speed response operation is required.
Dimensions are subject to change without notice. Contact us or a dealer for the latest information.
Read the Instruction Manual carefully and understand all precautions and remarks before using the products.

Motor Specifications 200V MHME 2.0kW [High inertia, Middle capacity]

Specifications

			AC200V	
Motor model *1		MHME	202G1□	202S1□
Applicable driver *2	Model No.	A5 series	MEDHT7364	
		A5E series	MEDHT7364E	
	Frame symbol		E-frame	
Power supply capacity (kVA)			3.3	
Rated output (W)			2.0	
Rated torque (N·m)			9.55	
Momentary Max. peak torque (N·m)			28.6	
Rated current (A(rms))			11.1	
Max. current (A(o-p))			47	
Regenerative brake frequency (times/min) Note)1	Without option		45	
	DV0P4285		142	
Rated rotational speed (r/min)			2000	
Max. rotational speed (r/min)			3000	
Moment of inertia of rotor ($\times10^{-4}$kg·m^2)	Without brake		57.8	
	With brake		59.6	
Recommended moment of inertia ratio of the load and the rotor Note)3			5 times or less	
Rotary encoder specifications Note)5			20-bit Incremental	17-bit Absolute
	Resolution per single turn		1,048,576	131,072

• **Brake specifications** (For details, refer to P.105)
(This brake will be released when it is energized.
Do not use this for braking the motor in motion.)

Static friction torque (N·m)	24.5 or more
Engaging time (ms)	80 or less
Releasing time (ms) Note)4	25 or less
Exciting current (DC) (A)	1.3±10%
Releasing voltage (DC) (V)	2 or more
Exciting voltage (DC) (V)	24±2.4

• **Permissible load** (For details, refer to P.104)

During assembly	Radial load P-direction (N)	1666
	Thrust load A-direction (N)	784
	Thrust load B-direction (N)	980
During operation	Radial load P-direction (N)	784
	Thrust load A, B-direction (N)	343

• For details of Note 1 to Note 5, refer to P.104.
• Dimensions of Driver, refer to P.33.
*1 Rotaly encoder specifications: □
*2 The product that the end of driver model designation has "E" is "positioning type".
Detail of model designation, refer to P.11.

Torque characteristics (at AC200V of power voltage <Dotted line represents the torque at 10% less supply voltage.>)

With oil seal

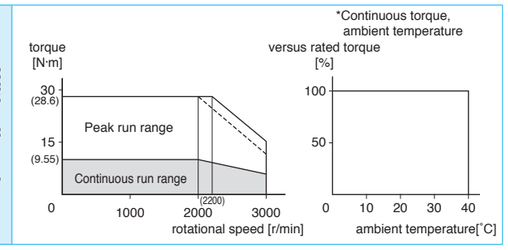

Dimensions

Mass (kg)/ Without brake: 12.2
With brake: 15.5

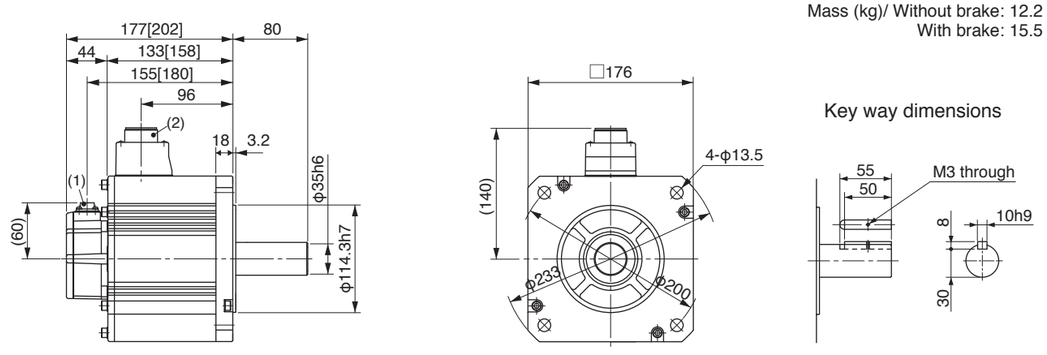

(1) Encoder connector
(2) Motor/Brake connector

* Figures in [ ] represent the dimensions of with brake.

<Cautions> Reduce the moment of inertia ratio if high speed response operation is required.
Dimensions are subject to change without notice. Contact us or a dealer for the latest information.
Read the Instruction Manual carefully and understand all precautions and remarks before using the products.

Motor Specifications 200V MHME 3.0kW [High inertia, Middle capacity]

Specifications

			AC200V	
Motor model *1		MHME	302G1□	302S1□
Applicable driver *2	Model No.	A5 series	MFDHTA390	
		A5E series	MFDHTA390E	
	Frame symbol		F-frame	
Power supply capacity (kVA)			4.5	
Rated output (W)			3.0	
Rated torque (N·m)			14.3	
Momentary Max. peak torque (N·m)			43.0	
Rated current (A(rms))			16.0	
Max. current (A(o-p))			68	
Regenerative brake frequency (times/min) Note)1	Without option		19	
	DV0P4285×2		142	
Rated rotational speed (r/min)			2000	
Max. rotational speed (r/min)			3000	
Moment of inertia of rotor ($\times10^{-4}$kg·m^2)	Without brake		90.5	
	With brake		92.1	
Recommended moment of inertia ratio of the load and the rotor Note)3			5 times or less	
Rotary encoder specifications Note)5			20-bit Incremental	17-bit Absolute
	Resolution per single turn		1,048,576	131,072

• **Brake specifications** (For details, refer to P.105)
(This brake will be released when it is energized.
Do not use this for braking the motor in motion.)

Static friction torque (N·m)	24.5 or more
Engaging time (ms)	80 or less
Releasing time (ms) Note)4	25 or less
Exciting current (DC) (A)	1.3±10%
Releasing voltage (DC) (V)	2 or more
Exciting voltage (DC) (V)	24±2.4

• **Permissible load** (For details, refer to P.104)

During assembly	Radial load P-direction (N)	1666
	Thrust load A-direction (N)	784
	Thrust load B-direction (N)	980
During operation	Radial load P-direction (N)	784
	Thrust load A, B-direction (N)	343

• For details of Note 1 to Note 5, refer to P.104.
• Dimensions of Driver, refer to P.34.
*1 Rotaly encoder specifications: □
*2 The product that the end of driver model designation has "E" is "positioning type".
Detail of model designation, refer to P.11.

Torque characteristics (at AC200V of power voltage <Dotted line represents the torque at 10% less supply voltage.>)

With oil seal

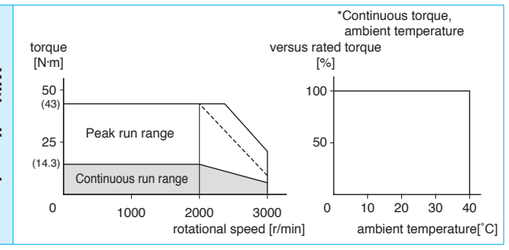

Dimensions

Mass (kg)/ Without brake: 16.0
With brake: 19.2

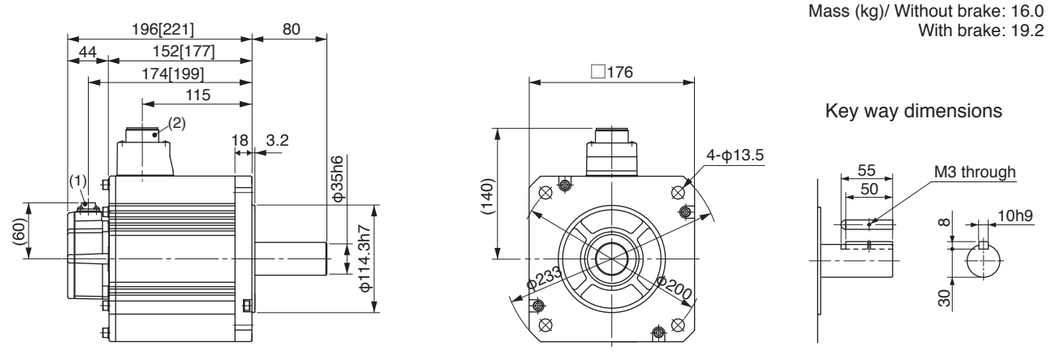

(1) Encoder connector
(2) Motor/Brake connector

* Figures in [ ] represent the dimensions of with brake.

<Cautions> Reduce the moment of inertia ratio if high speed response operation is required.
Dimensions are subject to change without notice. Contact us or a dealer for the latest information.
Read the Instruction Manual carefully and understand all precautions and remarks before using the products.

Motor Specifications 200V MHME 4.0kW [High inertia, Middle capacity]

Specifications

			AC200V	
Motor model *1		MHME	402G1□	402S1□
Applicable driver *2	Model No.	A5 series	MFDHTB3A2	
		A5E series	MFDHTB3A2E	
	Frame symbol		F-frame	
Power supply capacity		(kVA)	6.0	
Rated output		(W)	4.0	
Rated torque		(N·m)	19.1	
Momentary Max. peak torque		(N·m)	57.3	
Rated current		(A(rms))	21.0	
Max. current		(A(o-p))	89	
Regenerative brake frequency (times/min) Note)1	Without option		17	
	DV0P4285×2		125	
Rated rotational speed		(r/min)	2000	
Max. rotational speed		(r/min)	3000	
Moment of inertia of rotor ($\times10^{-4}$kg·m^2)	Without brake		112	
	With brake		114	
Recommended moment of inertia ratio of the load and the rotor Note)3			5 times or less	
Rotary encoder specifications Note)5			20-bit Incremental	17-bit Absolute
	Resolution per single turn		1,048,576	131,072

• **Brake specifications** (For details, refer to P.105)
(This brake will be released when it is energized. Do not use this for braking the motor in motion.)

Static friction torque (N·m)	24.5 or more
Engaging time (ms)	80 or less
Releasing time (ms) Note)4	25 or less
Exciting current (DC) (A)	1.3±10%
Releasing voltage (DC) (V)	2 or more
Exciting voltage (DC) (V)	24±2.4

• **Permissible load** (For details, refer to P.104)

During assembly	Radial load P-direction (N)	1666
	Thrust load A-direction (N)	784
	Thrust load B-direction (N)	980
During operation	Radial load P-direction (N)	784
	Thrust load A, B-direction (N)	343

• For details of Note 1 to Note 5, refer to P.104.
• Dimensions of Driver, refer to P.34.
*1 Rotaly encoder specifications: □
*2 The product that the end of driver model designation has "E" is "positioning type".
Detail of model designation, refer to P.11.

Torque characteristics (at AC200V of power voltage <Dotted line represents the torque at 10% less supply voltage.>)

With oil seal

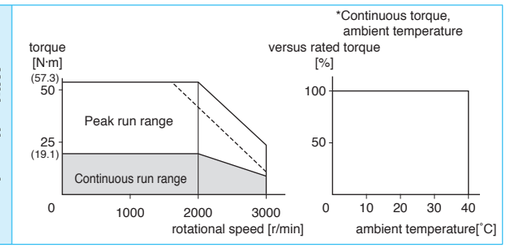

Dimensions

Mass (kg)/ Without brake: 18.6
With brake: 21.8

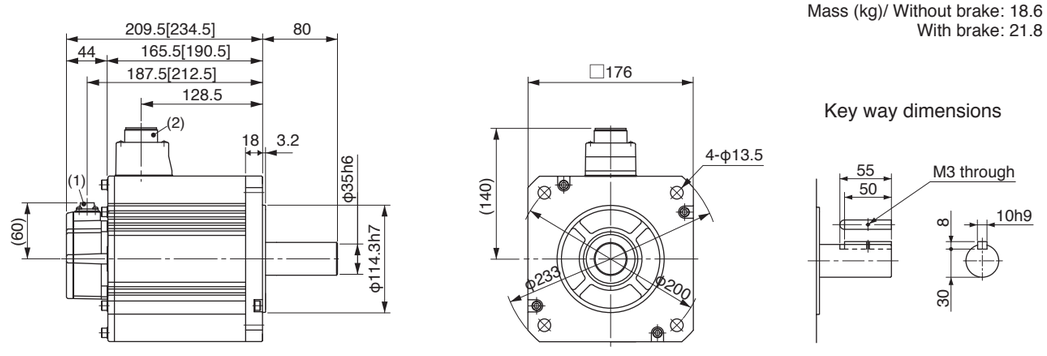

(1) Encoder connector
(2) Motor/Brake connector

* Figures in [ ] represent the dimensions of with brake.

<Cautions> Reduce the moment of inertia ratio if high speed response operation is required.
Dimensions are subject to change without notice. Contact us or a dealer for the latest information.
Read the Instruction Manual carefully and understand all precautions and remarks before using the products.

Motor Specifications 200V MHME 5.0kW [High inertia, Middle capacity]

Specifications

			AC200V	
Motor model *1		MHME	502G1□	502S1□
Applicable driver *2	Model No.	A5 series	MFDHTB3A2	
		A5E series	MFDHTB3A2E	
	Frame symbol		F-frame	
Power supply capacity		(kVA)	7.5	
Rated output		(W)	5.0	
Rated torque		(N·m)	23.9	
Momentary Max. peak torque		(N·m)	71.6	
Rated current		(A(rms))	25.9	
Max. current		(A(o-p))	110	
Regenerative brake frequency (times/min) Note)1	Without option		10	
	DV0P4285×2		76	
Rated rotational speed		(r/min)	2000	
Max. rotational speed		(r/min)	3000	
Moment of inertia of rotor ($\times10^{-4}$kg·m^2)	Without brake		162	
	With brake		164	
Recommended moment of inertia ratio of the load and the rotor Note)3			5 times or less	
Rotary encoder specifications Note)5			20-bit Incremental	17-bit Absolute
	Resolution per single turn		1,048,576	131,072

• **Brake specifications** (For details, refer to P.105)
(This brake will be released when it is energized. Do not use this for braking the motor in motion.)

Static friction torque (N·m)	24.5 or more
Engaging time (ms)	80 or less
Releasing time (ms) Note)4	25 or less
Exciting current (DC) (A)	1.3±10%
Releasing voltage (DC) (V)	2 or more
Exciting voltage (DC) (V)	24±2.4

• **Permissible load** (For details, refer to P.104)

During assembly	Radial load P-direction (N)	1666
	Thrust load A-direction (N)	784
	Thrust load B-direction (N)	980
During operation	Radial load P-direction (N)	784
	Thrust load A, B-direction (N)	343

• For details of Note 1 to Note 5, refer to P.104.
• Dimensions of Driver, refer to P.34.
*1 Rotaly encoder specifications: □
*2 The product that the end of driver model designation has "E" is "positioning type".
Detail of model designation, refer to P.11.

Torque characteristics (at AC200V of power voltage <Dotted line represents the torque at 10% less supply voltage.>)

With oil seal

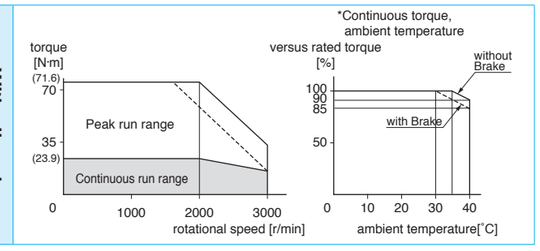

Dimensions

Mass (kg)/ Without brake: 23.0
With brake: 26.2

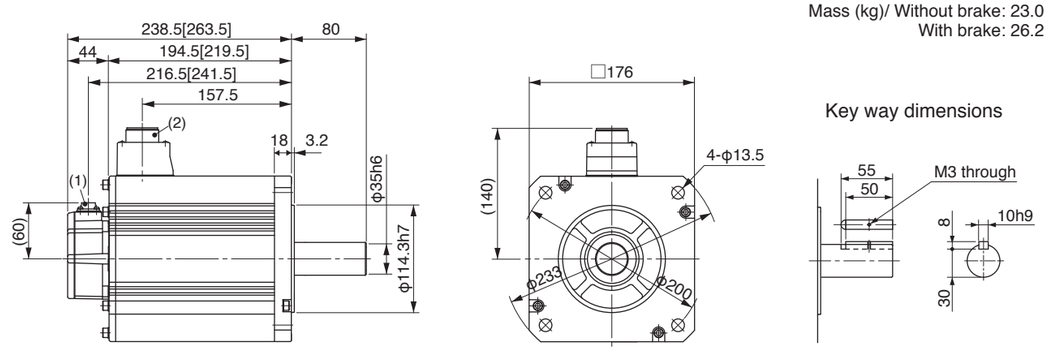

(1) Encoder connector
(2) Motor/Brake connector

* Figures in [ ] represent the dimensions of with brake.

<Cautions> Reduce the moment of inertia ratio if high speed response operation is required.
Dimensions are subject to change without notice. Contact us or a dealer for the latest information.
Read the Instruction Manual carefully and understand all precautions and remarks before using the products.

Motor Specifications 100V MSMD 50W [Low inertia, Small capacity]

Specifications

		AC100V	
Motor model *1	MSMD	5AZG1□	5AZS1□
Applicable driver *2	Model No. A5 series	MADHT1105	
	Model No. A5E series	MADHT1105E	
	Frame symbol	A-frame	
Power supply capacity (kVA)		0.5	
Rated output (W)		50	
Rated torque (N·m)		0.16	
Momentary Max. peak torque (N·m)		0.48	
Rated current (A(rms))		1.1	
Max. current (A(o-p))		4.7	
Regenerative brake frequency (times/min) Note)1	Without option	No limit Note)2	
	DV0P4280	No limit Note)2	
Rated rotational speed (r/min)		3000	
Max. rotational speed (r/min)		5000	
Moment of inertia of rotor ($\times10^{-4}$kg·m^2)	Without brake	0.025	
	With brake	0.027	
Recommended moment of inertia ratio of the load and the rotor Note)3		30 times or less	
Rotary encoder specifications Note)5		20-bit Incremental	17-bit Absolute
	Resolution per single turn	1,048,576	131,072

• **Brake specifications** (For details, refer to P.105)
(This brake will be released when it is energized. Do not use this for braking the motor in motion.)

Static friction torque (N·m)	0.29 or more
Engaging time (ms)	35 or less
Releasing time (ms) Note)4	20 or less
Exciting current (DC) (A)	0.3
Releasing voltage (DC) (V)	1 or more
Exciting voltage (DC) (V)	24±1.2

• **Permissible load** (For details, refer to P.104)

During assembly	Radial load P-direction (N)	147
	Thrust load A-direction (N)	88
	Thrust load B-direction (N)	117.6
During operation	Radial load P-direction (N)	68.6
	Thrust load A, B-direction (N)	58.8

• For details of Note 1 to Note 5, refer to P.104.
• Dimensions of Driver, refer to P.30.
*1 Rotaly encoder specifications: □
*2 The product that the end of driver model designation has "E" is "positioning type".
Detail of model designation, refer to P.11.

Torque characteristics (at AC100V of power voltage <Dotted line represents the torque at 10% less supply voltage.>)

Without oil seal

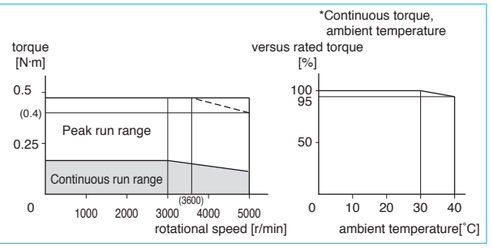

With oil seal

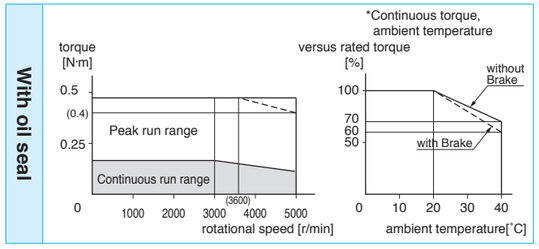

Dimensions

<Without Brake>

Mass (kg)/ 0.32

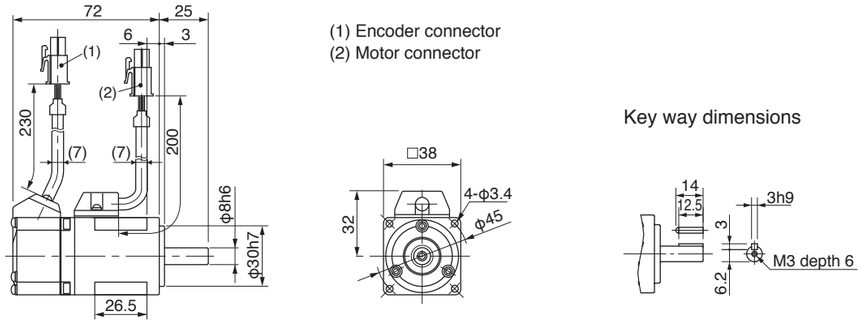

(1) Encoder connector
(2) Motor connector

Key way dimensions

* For the dimensions of with brake, refer to the right page.

<Cautions> Reduce the moment of inertia ratio if high speed response operation is required.
Dimensions are subject to change without notice. Contact us or a dealer for the latest information.
Read the Instruction Manual carefully and understand all precautions and remarks before using the products.

Motor Specifications 200V MSMD 50W [Low inertia, Small capacity]

Specifications

		AC200V	
Motor model *1	MSMD	5AZG1□	5AZS1□
Applicable driver *2	Model No. A5 series	MADHT1505	
	Model No. A5E series	MADHT1505E	
	Frame symbol	A-frame	
Power supply capacity (kVA)		0.5	
Rated output (W)		50	
Rated torque (N·m)		0.16	
Momentary Max. peak torque (N·m)		0.48	
Rated current (A(rms))		1.1	
Max. current (A(o-p))		4.7	
Regenerative brake frequency (times/min) Note)1	Without option	No limit Note)2	
	DV0P4281	No limit Note)2	
Rated rotational speed (r/min)		3000	
Max. rotational speed (r/min)		5000	
Moment of inertia of rotor ($\times10^{-4}$kg·m^2)	Without brake	0.025	
	With brake	0.027	
Recommended moment of inertia ratio of the load and the rotor Note)3		30 times or less	
Rotary encoder specifications Note)5		20-bit Incremental	17-bit Absolute
	Resolution per single turn	1,048,576	131,072

• **Brake specifications** (For details, refer to P.105)
(This brake will be released when it is energized. Do not use this for braking the motor in motion.)

Static friction torque (N·m)	0.29 or more
Engaging time (ms)	35 or less
Releasing time (ms) Note)4	20 or less
Exciting current (DC) (A)	0.3
Releasing voltage (DC) (V)	1 or more
Exciting voltage (DC) (V)	24±1.2

• **Permissible load** (For details, refer to P.104)

During assembly	Radial load P-direction (N)	147
	Thrust load A-direction (N)	88
	Thrust load B-direction (N)	117.6
During operation	Radial load P-direction (N)	68.6
	Thrust load A, B-direction (N)	58.8

• For details of Note 1 to Note 5, refer to P.104.
• Dimensions of Driver, refer to P.30.
*1 Rotaly encoder specifications: □
*2 The product that the end of driver model designation has "E" is "positioning type".
Detail of model designation, refer to P.11.

Torque characteristics (at AC200V of power voltage <Dotted line represents the torque at 10% less supply voltage.>)

Without oil seal

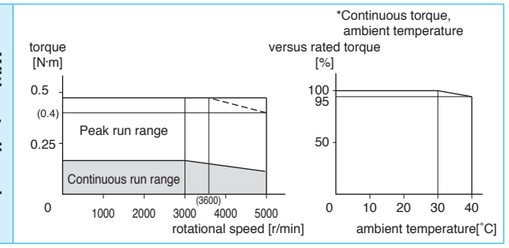

With oil seal

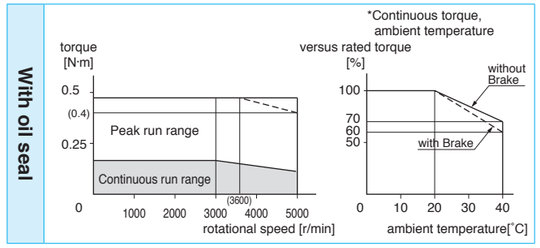

Dimensions

<With Brake>

Mass (kg)/ 0.53

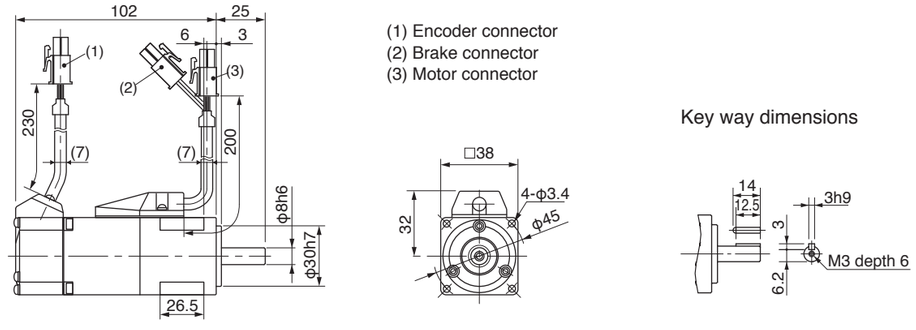

(1) Encoder connector
(2) Brake connector
(3) Motor connector

Key way dimensions

* For the dimensions of without brake, refer to the left page.

<Cautions> Reduce the moment of inertia ratio if high speed response operation is required.
Dimensions are subject to change without notice. Contact us or a dealer for the latest information.
Read the Instruction Manual carefully and understand all precautions and remarks before using the products.

Specifications

		AC100V	
Motor model *1	MSMD	011G1□	011S1□
Applicable driver *2	Model No. A5 series	MADHT1107	
	Model No. A5E series	MADHT1107E	
	Frame symbol	A-frame	
Power supply capacity (kVA)		0.4	
Rated output (W)		100	
Rated torque (N·m)		0.32	
Momentary Max. peak torque (N·m)		0.95	
Rated current (A(rms))		1.7	
Max. current (A(o-p))		7.2	
Regenerative brake frequency (times/min) Note)1	Without option	No limit Note)2	
	DV0P4280	No limit Note)2	
Rated rotational speed (r/min)		3000	
Max. rotational speed (r/min)		5000	
Moment of inertia of rotor ($\times 10^{-4}$kg·m^2)	Without brake	0.051	
	With brake	0.054	
Recommended moment of inertia ratio of the load and the rotor Note)3		30 times or less	
Rotary encoder specifications Note)5		20-bit Incremental	17-bit Absolute
	Resolution per single turn	1,048,576	131,072

• **Brake specifications** (For details, refer to P.105)
(This brake will be released when it is energized. Do not use this for braking the motor in motion.)

Static friction torque (N·m)	0.29 or more
Engaging time (ms)	35 or less
Releasing time (ms) Note)4	20 or less
Exciting current (DC) (A)	0.3
Releasing voltage (DC) (V)	1 or more
Exciting voltage (DC) (V)	24±1.2

• **Permissible load** (For details, refer to P.104)

During assembly	Radial load P-direction (N)	147
	Thrust load A-direction (N)	88
	Thrust load B-direction (N)	117.6
During operation	Radial load P-direction (N)	68.6
	Thrust load A, B-direction (N)	58.8

• For details of Note 1 to Note 5, refer to P.104.
• Dimensions of Driver, refer to P.30.
*1 Rotaly encoder specifications: □
*2 The product that the end of driver model designation has "E" is "positioning type".
Detail of model designation, refer to P.11.

Torque characteristics (at AC100V of power voltage <Dotted line represents the torque at 10% less supply voltage.>)

Without oil seal

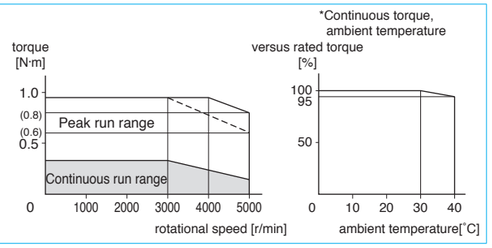

With oil seal

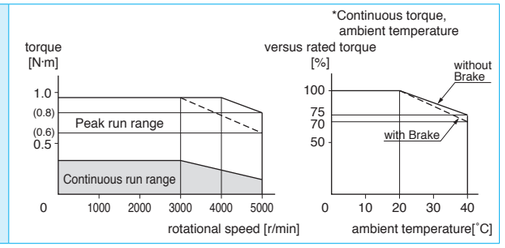

Dimensions

<Without Brake>

Mass (kg)/ 0.47

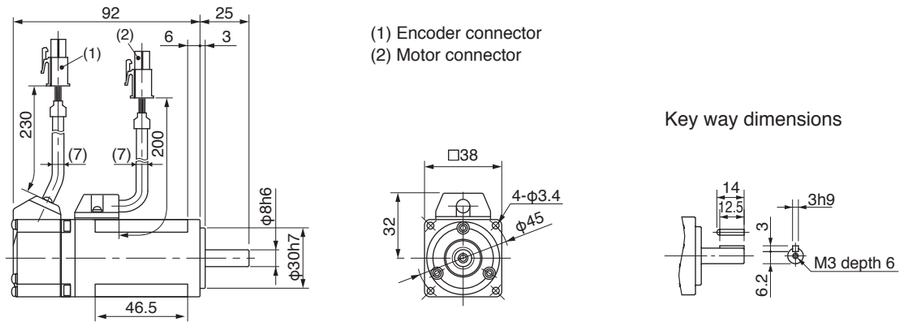

(1) Encoder connector
(2) Motor connector

Key way dimensions

* For the dimensions of with brake, refer to the right page.

<Cautions> Reduce the moment of inertia ratio if high speed response operation is required.
Dimensions are subject to change without notice. Contact us or a dealer for the latest information.
Read the Instruction Manual carefully and understand all precautions and remarks before using the products.

Specifications

		AC200V	
Motor model *1	MSMD	012G1□	012S1□
Applicable driver *2	Model No. A5 series	MADHT1505	
	Model No. A5E series	MADHT1505E	
	Frame symbol	A-frame	
Power supply capacity (kVA)		0.5	
Rated output (W)		100	
Rated torque (N·m)		0.32	
Momentary Max. peak torque (N·m)		0.95	
Rated current (A(rms))		1.1	
Max. current (A(o-p))		4.7	
Regenerative brake frequency (times/min) Note)1	Without option	No limit Note)2	
	DV0P4281	No limit Note)2	
Rated rotational speed (r/min)		3000	
Max. rotational speed (r/min)		5000	
Moment of inertia of rotor ($\times 10^{-4}$kg·m^2)	Without brake	0.051	
	With brake	0.054	
Recommended moment of inertia ratio of the load and the rotor Note)3		30 times or less	
Rotary encoder specifications Note)5		20-bit Incremental	17-bit Absolute
	Resolution per single turn	1,048,576	131,072

• **Brake specifications** (For details, refer to P.105)
(This brake will be released when it is energized. Do not use this for braking the motor in motion.)

Static friction torque (N·m)	0.29 or more
Engaging time (ms)	35 or less
Releasing time (ms) Note)4	20 or less
Exciting current (DC) (A)	0.3
Releasing voltage (DC) (V)	1 or more
Exciting voltage (DC) (V)	24±1.2

• **Permissible load** (For details, refer to P.104)

During assembly	Radial load P-direction (N)	147
	Thrust load A-direction (N)	88
	Thrust load B-direction (N)	117.6
During operation	Radial load P-direction (N)	68.6
	Thrust load A, B-direction (N)	58.8

• For details of Note 1 to Note 5, refer to P.104.
• Dimensions of Driver, refer to P.30.
*1 Rotaly encoder specifications: □
*2 The product that the end of driver model designation has "E" is "positioning type".
Detail of model designation, refer to P.11.

Torque characteristics (at AC200V of power voltage)

Without oil seal

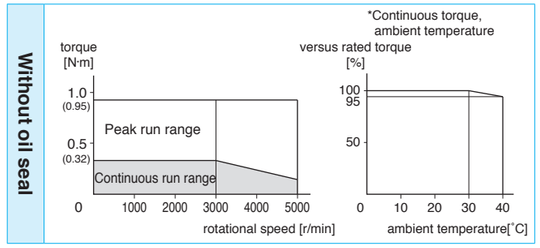

With oil seal

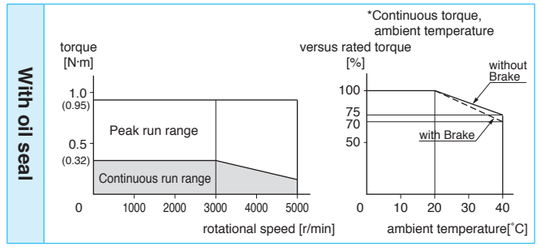

Dimensions

<With Brake>

Mass (kg)/ 0.68

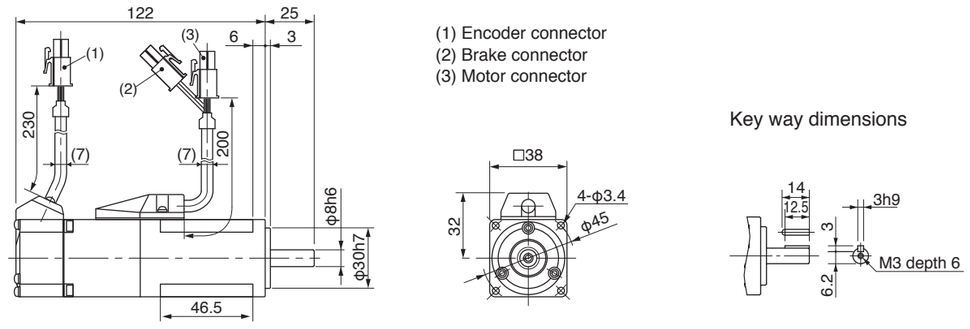

(1) Encoder connector
(2) Brake connector
(3) Motor connector

Key way dimensions

* For the dimensions of without brake, refer to the left page.

<Cautions> Reduce the moment of inertia ratio if high speed response operation is required.
Dimensions are subject to change without notice. Contact us or a dealer for the latest information.
Read the Instruction Manual carefully and understand all precautions and remarks before using the products.

Motor Specifications 100V MSMD 200W [Low inertia, Small capacity]

Specifications

		AC100V	
Motor model *1	MSMD	021G1□	021S1□
Applicable driver *2	Model No. A5 series	MBDHT2110	
	Model No. A5E series	MBDHT2110E	
	Frame symbol	B-frame	
Power supply capacity (kVA)		0.5	
Rated output (W)		200	
Rated torque (N·m)		0.64	
Momentary Max. peak torque (N·m)		1.91	
Rated current (A(rms))		2.5	
Max. current (A(o-p))		10.6	
Regenerative brake frequency (times/min) Note)1	Without option	No limit Note)2	
	DV0P4283	No limit Note)2	
Rated rotational speed (r/min)		3000	
Max. rotational speed (r/min)		5000	
Moment of inertia of rotor ($\times10^{-4}$kg·m^2)	Without brake	0.14	
	With brake	0.16	
Recommended moment of inertia ratio of the load and the rotor Note)3		30 times or less	
Rotary encoder specifications Note)5		20-bit Incremental	17-bit Absolute
	Resolution per single turn	1,048,576	131,072

• **Brake specifications** (For details, refer to P.105)
(This brake will be released when it is energized. Do not use this for braking the motor in motion.)

Static friction torque (N·m)	1.27 or more
Engaging time (ms)	50 or less
Releasing time (ms) Note)4	15 or less
Exciting current (DC) (A)	0.36
Releasing voltage (DC) (V)	1 or more
Exciting voltage (DC) (V)	24±1.2

• **Permissible load** (For details, refer to P.104)

During assembly	Radial load P-direction (N)	392
	Thrust load A-direction (N)	147
	Thrust load B-direction (N)	196
During operation	Radial load P-direction (N)	245
	Thrust load A, B-direction (N)	98

• For details of Note 1 to Note 5, refer to P.104.
• Dimensions of Driver, refer to P.30.
*1 Rotaly encoder specifications: □
*2 The product that the end of driver model designation has "E" is "positioning type".
Detail of model designation, refer to P.11.

Torque characteristics (at AC100V of power voltage <Dotted line represents the torque at 10% less supply voltage.>)

Without oil seal

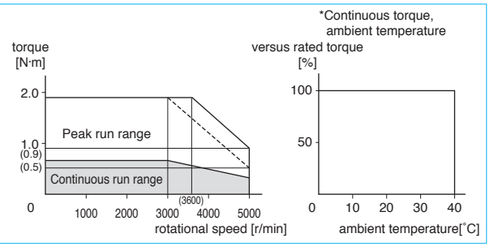

With oil seal

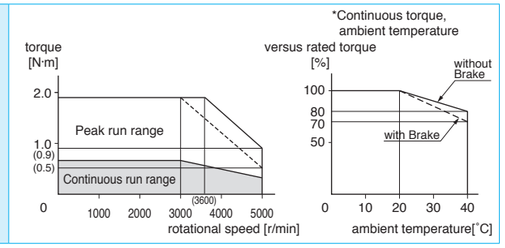

Dimensions

<Without Brake>

Mass (kg)/ 0.82

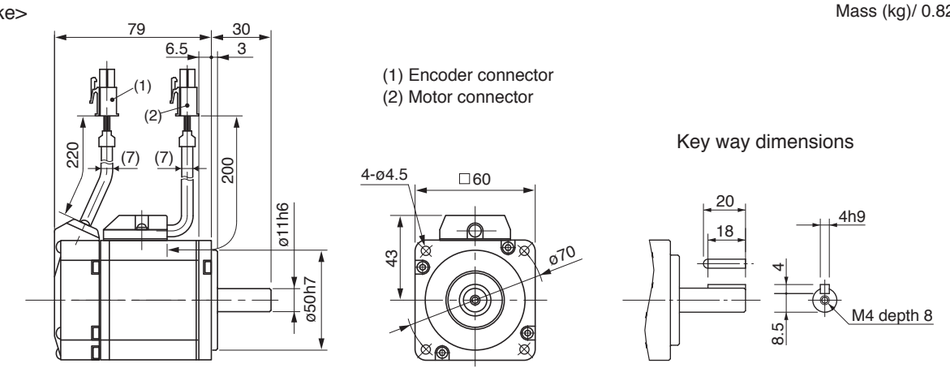

* For the dimensions of with brake, refer to the right page.

<Cautions> Reduce the moment of inertia ratio if high speed response operation is required.
Dimensions are subject to change without notice. Contact us or a dealer for the latest information.
Read the Instruction Manual carefully and understand all precautions and remarks before using the products.

Motor Specifications 200V MSMD 200W [Low inertia, Small capacity]

Specifications

		AC200V	
Motor model *1	MSMD	022G1□	022S1□
Applicable driver *2	Model No. A5 series	MADHT1507	
	Model No. A5E series	MADHT1507E	
	Frame symbol	A-frame	
Power supply capacity (kVA)		0.5	
Rated output (W)		200	
Rated torque (N·m)		0.64	
Momentary Max. peak torque (N·m)		1.91	
Rated current (A(rms))		1.6	
Max. current (A(o-p))		6.9	
Regenerative brake frequency (times/min) Note)1	Without option	No limit Note)2	
	DV0P4283	No limit Note)2	
Rated rotational speed (r/min)		3000	
Max. rotational speed (r/min)		5000	
Moment of inertia of rotor ($\times10^{-4}$kg·m^2)	Without brake	0.14	
	With brake	0.16	
Recommended moment of inertia ratio of the load and the rotor Note)3		30 times or less	
Rotary encoder specifications Note)5		20-bit Incremental	17-bit Absolute
	Resolution per single turn	1,048,576	131,072

• **Brake specifications** (For details, refer to P.105)
(This brake will be released when it is energized. Do not use this for braking the motor in motion.)

Static friction torque (N·m)	1.27 or more
Engaging time (ms)	50 or less
Releasing time (ms) Note)4	15 or less
Exciting current (DC) (A)	0.36
Releasing voltage (DC) (V)	1 or more
Exciting voltage (DC) (V)	24±1.2

• **Permissible load** (For details, refer to P.104)

During assembly	Radial load P-direction (N)	392
	Thrust load A-direction (N)	147
	Thrust load B-direction (N)	196
During operation	Radial load P-direction (N)	245
	Thrust load A, B-direction (N)	98

• For details of Note 1 to Note 5, refer to P.104.
• Dimensions of Driver, refer to P.30.
*1 Rotaly encoder specifications: □
*2 The product that the end of driver model designation has "E" is "positioning type".
Detail of model designation, refer to P.11.

Torque characteristics (at AC200V of power voltage <Dotted line represents the torque at 10% less supply voltage.>)

Without oil seal

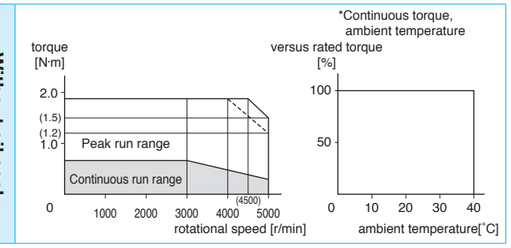

With oil seal

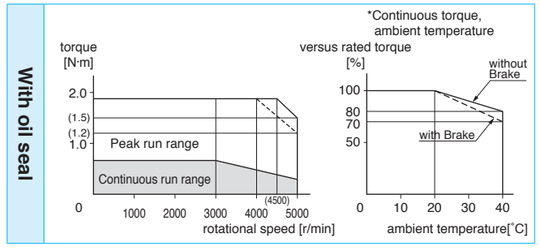

Dimensions

<With Brake>

Mass (kg)/ 1.3

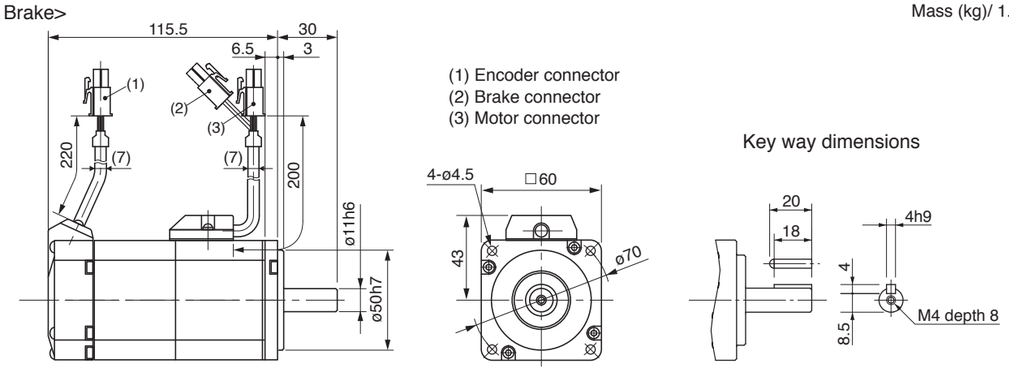

* For the dimensions of without brake, refer to the left page.

<Cautions> Reduce the moment of inertia ratio if high speed response operation is required.
Dimensions are subject to change without notice. Contact us or a dealer for the latest information.
Read the Instruction Manual carefully and understand all precautions and remarks before using the products.

Motor Specifications 100V MSMD 400W [Low inertia, Small capacity]

Specifications

		AC100V	
Motor model *1	MSMD	041G1□	041S1□
Applicable driver *2	Model No. A5 series	MCDHT3120	
	Model No. A5E series	MCDHT3120E	
	Frame symbol	C-frame	
Power supply capacity (kVA)		0.9	
Rated output (W)		400	
Rated torque (N·m)		1.3	
Momentary Max. peak torque (N·m)		3.8	
Rated current (A(rms))		4.6	
Max. current (A(o-p))		19.5	
Regenerative brake frequency (times/min) Note)1	Without option	No limit Note)2	
	DV0P4282	No limit Note)2	
Rated rotational speed (r/min)		3000	
Max. rotational speed (r/min)		5000	
Moment of inertia of rotor ($\times10^{-4}$kg·m^2)	Without brake	0.26	
	With brake	0.28	
Recommended moment of inertia ratio of the load and the rotor Note)3		30 times or less	
Rotary encoder specifications Note)5		20-bit Incremental	17-bit Absolute
	Resolution per single turn	1,048,576	131,072

• **Brake specifications** (For details, refer to P.105)
(This brake will be released when it is energized. Do not use this for braking the motor in motion.)

Static friction torque (N·m)	1.27 or more
Engaging time (ms)	50 or less
Releasing time (ms) Note)4	15 or less
Exciting current (DC) (A)	0.36
Releasing voltage (DC) (V)	1 or more
Exciting voltage (DC) (V)	24±1.2

• **Permissible load** (For details, refer to P.104)

During assembly	Radial load P-direction (N)	392
	Thrust load A-direction (N)	147
	Thrust load B-direction (N)	196
During operation	Radial load P-direction (N)	245
	Thrust load A, B-direction (N)	98

• For details of Note 1 to Note 5, refer to P.104.
• Dimensions of Driver, refer to P.31.
*1 Rotaly encoder specifications: □
*2 The product that the end of driver model designation has "E" is "positioning type".
Detail of model designation, refer to P.11.

Torque characteristics (at AC100V of power voltage <Dotted line represents the torque at 10% less supply voltage.>)

Without oil seal

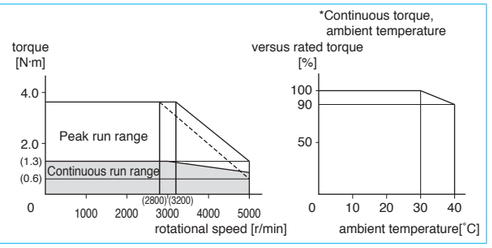

With oil seal

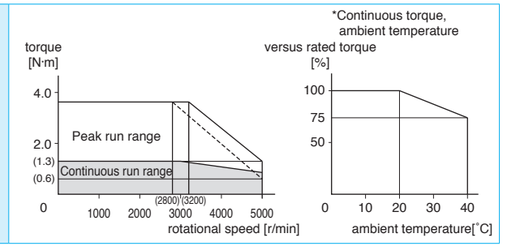

Dimensions

<Without Brake>

Mass (kg)/ 1.2

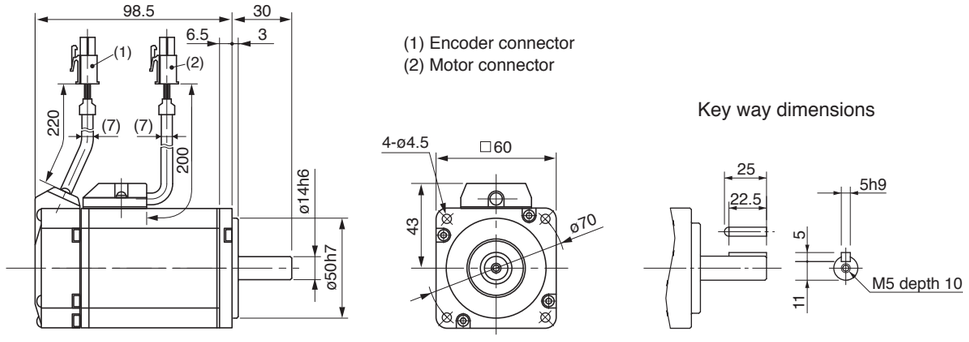

* For the dimensions of with brake, refer to the right page.

<Cautions> Reduce the moment of inertia ratio if high speed response operation is required.
Dimensions are subject to change without notice. Contact us or a dealer for the latest information.
Read the Instruction Manual carefully and understand all precautions and remarks before using the products.

Motor Specifications 200V MSMD 400W [Low inertia, Small capacity]

Specifications

		AC200V	
Motor model *1	MSMD	042G1□	042S1□
Applicable driver *2	Model No. A5 series	MBDHT2510	
	Model No. A5E series	MBDHT2510E	
	Frame symbol	B-frame	
Power supply capacity (kVA)		0.9	
Rated output (W)		400	
Rated torque (N·m)		1.3	
Momentary Max. peak torque (N·m)		3.8	
Rated current (A(rms))		2.6	
Max. current (A(o-p))		11.0	
Regenerative brake frequency (times/min) Note)1	Without option	No limit Note)2	
	DV0P4283	No limit Note)2	
Rated rotational speed (r/min)		3000	
Max. rotational speed (r/min)		5000	
Moment of inertia of rotor ($\times10^{-4}$kg·m^2)	Without brake	0.26	
	With brake	0.28	
Recommended moment of inertia ratio of the load and the rotor Note)3		30 times or less	
Rotary encoder specifications Note)5		20-bit Incremental	17-bit Absolute
	Resolution per single turn	1,048,576	131,072

• **Brake specifications** (For details, refer to P.105)
(This brake will be released when it is energized. Do not use this for braking the motor in motion.)

Static friction torque (N·m)	1.27 or more
Engaging time (ms)	50 or less
Releasing time (ms) Note)4	15 or less
Exciting current (DC) (A)	0.36
Releasing voltage (DC) (V)	1 or more
Exciting voltage (DC) (V)	24±1.2

• **Permissible load** (For details, refer to P.104)

During assembly	Radial load P-direction (N)	392
	Thrust load A-direction (N)	147
	Thrust load B-direction (N)	196
During operation	Radial load P-direction (N)	245
	Thrust load A, B-direction (N)	98

• For details of Note 1 to Note 5, refer to P.104.
• Dimensions of Driver, refer to P.30.
*1 Rotaly encoder specifications: □
*2 The product that the end of driver model designation has "E" is "positioning type".
Detail of model designation, refer to P.11.

Torque characteristics (at AC200V of power voltage <Dotted line represents the torque at 10% less supply voltage.>)

Without oil seal

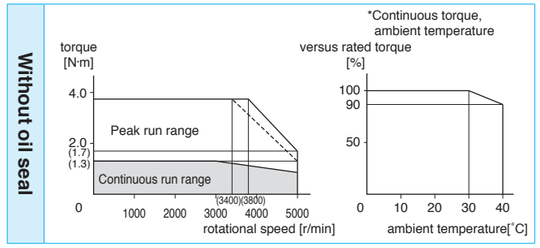

With oil seal

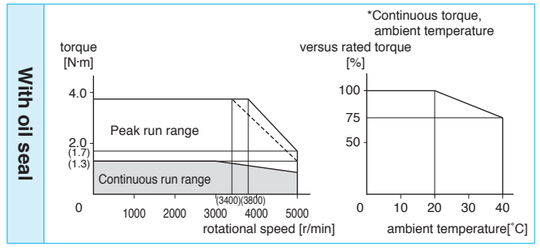

Dimensions

<With Brake>

Mass (kg)/ 1.7

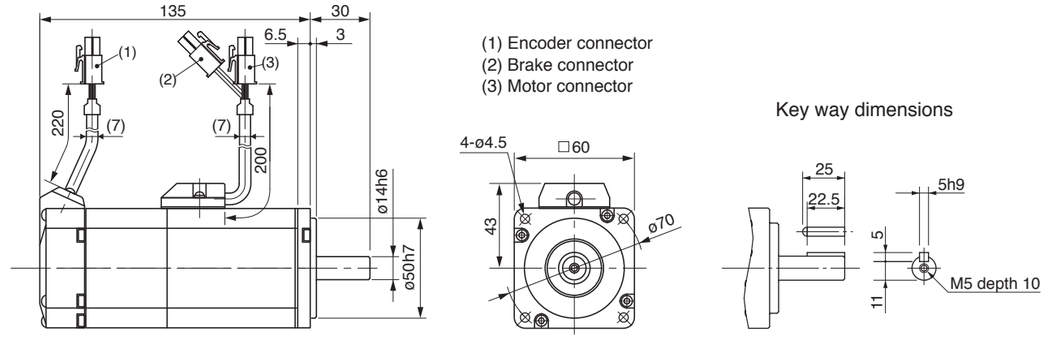

* For the dimensions of without brake, refer to the left page.

<Cautions> Reduce the moment of inertia ratio if high speed response operation is required.
Dimensions are subject to change without notice. Contact us or a dealer for the latest information.
Read the Instruction Manual carefully and understand all precautions and remarks before using the products.

Specifications

			AC200V	
Motor model *1		MSMD	082G1□	082S1□
Applicable driver *2	Model No.	A5 series	MCDHT3520	
		A5E series	MCDHT3520E	
	Frame symbol		C-frame	
Power supply capacity		(kVA)	1.3	
Rated output		(W)	750	
Rated torque		(N·m)	2.4	
Momentary Max. peak torque		(N·m)	7.1	
Rated current		(A(rms))	4.0	
Max. current		(A(o-p))	17.0	
Regenerative brake frequency (times/min) Note)1	Without option		No limit Note)2	
	DV0P4283		No limit Note)2	
Rated rotational speed		(r/min)	3000	
Max. rotational speed		(r/min)	4500	
Moment of inertia of rotor ($\times 10^{-4}$kg·m^2)	Without brake		0.87	
	With brake		0.97	
Recommended moment of inertia ratio of the load and the rotor Note)3			20 times or less	
Rotary encoder specifications Note)5			20-bit Incremental	17-bit Absolute
	Resolution per single turn		1,048,576	131,072

• **Brake specifications** (For details, refer to P.105)
(This brake will be released when it is energized.
Do not use this for braking the motor in motion.)

Static friction torque (N·m)	2.45 or more
Engaging time (ms)	70 or less
Releasing time (ms) Note)4	20 or less
Exciting current (DC) (A)	0.42
Releasing voltage (DC) (V)	1 or more
Exciting voltage (DC) (V)	24±1.2

• **Permissible load** (For details, refer to P.104)

During assembly	Radial load P-direction (N)	686
	Thrust load A-direction (N)	294
	Thrust load B-direction (N)	392
During operation	Radial load P-direction (N)	392
	Thrust load A, B-direction (N)	147

• For details of Note 1 to Note 5, refer to P.104.
• Dimensions of Driver, refer to P.31.
*1 Rotaly encoder specifications: □
*2 The product that the end of driver model designation has "E" is "positioning type".
Detail of model designation, refer to P.11.

Torque characteristics (at AC200V of power voltage <Dotted line represents the torque at 10% less supply voltage.>)

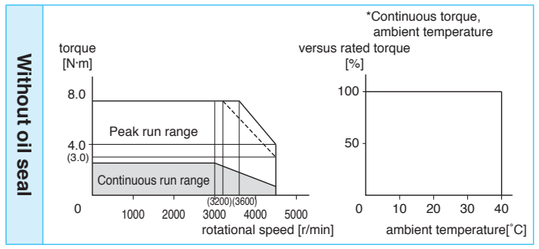

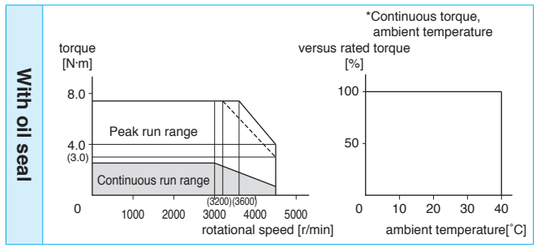

Dimensions

Mass (kg)/ Without brake: 2.3
With brake: 3.1

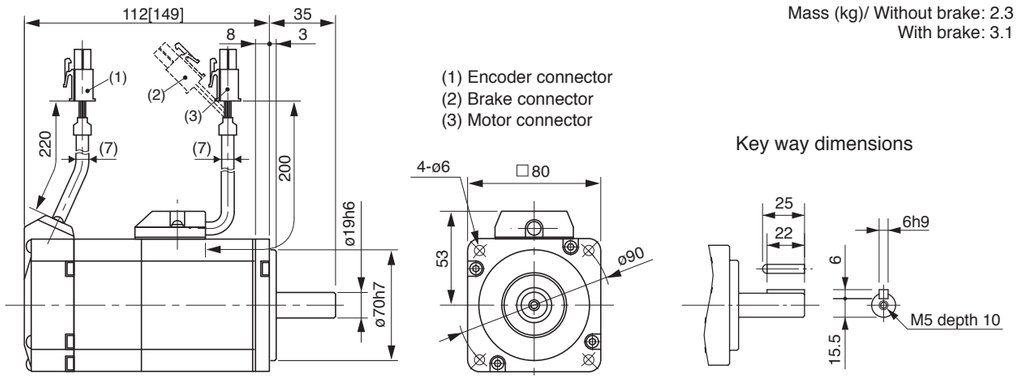

(1) Encoder connector
(2) Brake connector
(3) Motor connector

Key way dimensions

* Figures in [ ] represent the dimensions of with brake.

<Cautions> Reduce the moment of inertia ratio if high speed response operation is required.
Dimensions are subject to change without notice. Contact us or a dealer for the latest information.
Read the Instruction Manual carefully and understand all precautions and remarks before using the products.

MEMO

Motor Specifications 100V MHMD 200W [High inertia, Small capacity]

Specifications

			AC100V	
Motor model *1		MHMD	021G1□	021S1□
Applicable driver *2	Model No.	A5 series	MBDHT2110	
		A5E series	MBDHT2110E	
	Frame symbol		B-frame	
Power supply capacity		(kVA)	0.5	
Rated output		(W)	200	
Rated torque		(N·m)	0.64	
Momentary Max. peak torque		(N·m)	1.91	
Rated current		(A(rms))	2.5	
Max. current		(A(o-p))	10.6	
Regenerative brake frequency (times/min) Note)1	Without option		No limit Note)2	
	DV0P4283		No limit Note)2	
Rated rotational speed		(r/min)	3000	
Max. rotational speed		(r/min)	5000	
Moment of inertia of rotor ($\times 10^{-4}$kg·m^2)	Without brake		0.42	
	With brake		0.45	
Recommended moment of inertia ratio of the load and the rotor Note)3			10 times or less	
Rotary encoder specifications Note)5			20-bit Incremental	17-bit Absolute
	Resolution per single turn		1,048,576	131,072

• **Brake specifications** (For details, refer to P.105)
(This brake will be released when it is energized. Do not use this for braking the motor in motion.)

Static friction torque (N·m)	1.27 or more
Engaging time (ms)	50 or less
Releasing time (ms) Note)4	15 or less
Exciting current (DC) (A)	0.36
Releasing voltage (DC) (V)	1 or more
Exciting voltage (DC) (V)	24±1.2

• **Permissible load** (For details, refer to P.104)

During assembly	Radial load P-direction (N)	392
	Thrust load A-direction (N)	147
	Thrust load B-direction (N)	196
During operation	Radial load P-direction (N)	245
	Thrust load A, B-direction (N)	98

• For details of Note 1 to Note 5, refer to P.104.
• Dimensions of Driver, refer to P.30.
*1 Rotaly encoder specifications: □
*2 The product that the end of driver model designation has "E" is "positioning type".
Detail of model designation, refer to P.11.

Torque characteristics (at AC100V of power voltage <Dotted line represents the torque at 10% less supply voltage.>)

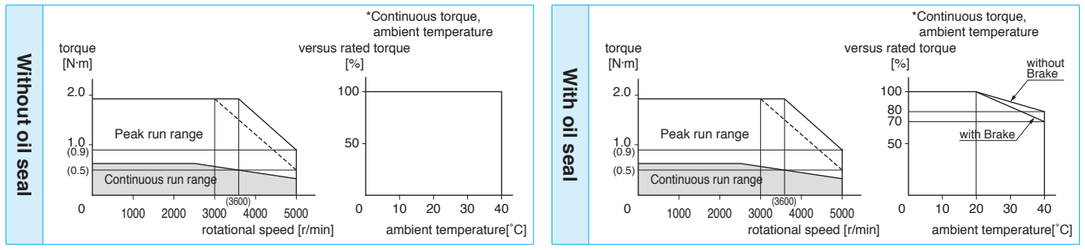

Dimensions

<Without Brake>

Mass (kg)/ 0.96

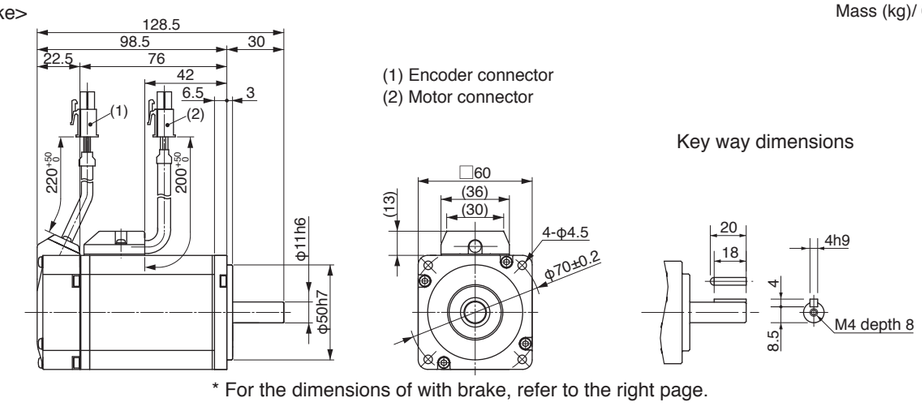

(1) Encoder connector
(2) Motor connector

* For the dimensions of with brake, refer to the right page.

<Cautions> Reduce the moment of inertia ratio if high speed response operation is required.
Dimensions are subject to change without notice. Contact us or a dealer for the latest information.
Read the Instruction Manual carefully and understand all precautions and remarks before using the products.

Motor Specifications 200V MHMD 200W [High inertia, Small capacity]

Specifications

			AC200V	
Motor model *1		MHMD	022G1□	022S1□
Applicable driver *2	Model No.	A5 series	MADHT1507	
		A5E series	MADHT1507E	
	Frame symbol		A-frame	
Power supply capacity		(kVA)	0.5	
Rated output		(W)	200	
Rated torque		(N·m)	0.64	
Momentary Max. peak torque		(N·m)	1.91	
Rated current		(A(rms))	1.6	
Max. current		(A(o-p))	6.9	
Regenerative brake frequency (times/min) Note)1	Without option		No limit Note)2	
	DV0P4283		No limit Note)2	
Rated rotational speed		(r/min)	3000	
Max. rotational speed		(r/min)	5000	
Moment of inertia of rotor ($\times 10^{-4}$kg·m^2)	Without brake		0.42	
	With brake		0.45	
Recommended moment of inertia ratio of the load and the rotor Note)3			10 times or less	
Rotary encoder specifications Note)5			20-bit Incremental	17-bit Absolute
	Resolution per single turn		1,048,576	131,072

• **Brake specifications** (For details, refer to P.105)
(This brake will be released when it is energized. Do not use this for braking the motor in motion.)

Static friction torque (N·m)	1.27 or more
Engaging time (ms)	50 or less
Releasing time (ms) Note)4	15 or less
Exciting current (DC) (A)	0.36
Releasing voltage (DC) (V)	1 or more
Exciting voltage (DC) (V)	24±1.2

• **Permissible load** (For details, refer to P.104)

During assembly	Radial load P-direction (N)	392
	Thrust load A-direction (N)	147
	Thrust load B-direction (N)	196
During operation	Radial load P-direction (N)	245
	Thrust load A, B-direction (N)	98

• For details of Note 1 to Note 5, refer to P.104.
• Dimensions of Driver, refer to P.30.
*1 Rotaly encoder specifications: □
*2 The product that the end of driver model designation has "E" is "positioning type".
Detail of model designation, refer to P.11.

Torque characteristics (at AC200V of power voltage <Dotted line represents the torque at 10% less supply voltage.>)

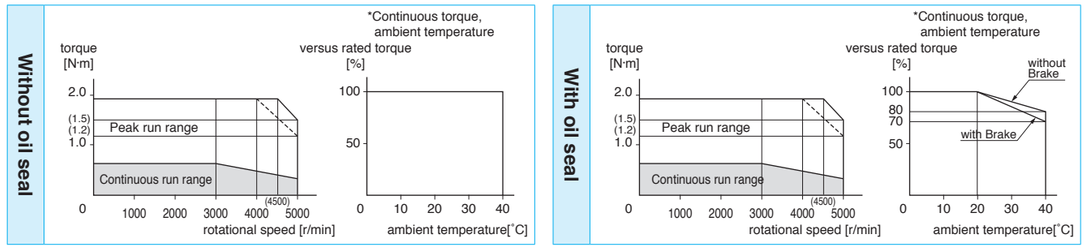

Dimensions

<With Brake>

Mass (kg)/ 1.4

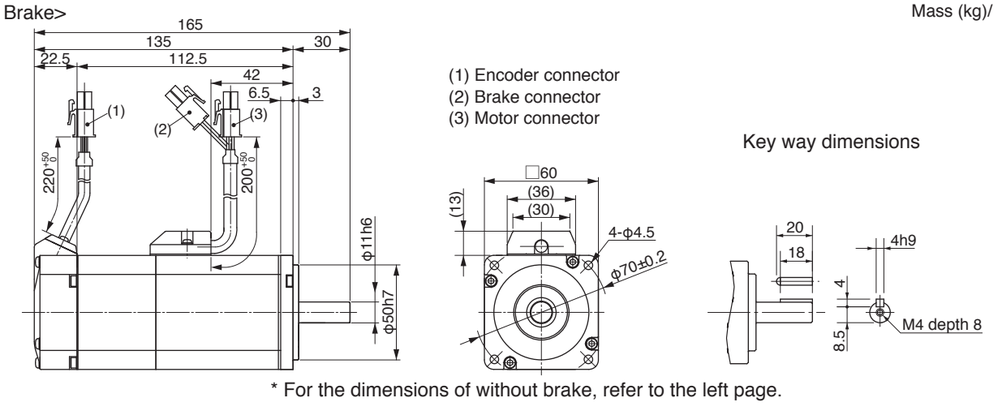

(1) Encoder connector
(2) Brake connector
(3) Motor connector

* For the dimensions of without brake, refer to the left page.

<Cautions> Reduce the moment of inertia ratio if high speed response operation is required.
Dimensions are subject to change without notice. Contact us or a dealer for the latest information.
Read the Instruction Manual carefully and understand all precautions and remarks before using the products.

Motor Specifications 100V MHMD 400W [High inertia, Small capacity]

Specifications

		AC100V	
Motor model *1	MHMD	041G1□	041S1□
Applicable driver *2	Model No. A5 series	MCDHT3120	
	Model No. A5E series	MCDHT3120E	
	Frame symbol	C-frame	
Power supply capacity (kVA)		0.9	
Rated output (W)		400	
Rated torque (N·m)		1.3	
Momentary Max. peak torque (N·m)		3.8	
Rated current (A(rms))		4.6	
Max. current (A(o-p))		11	
Regenerative brake frequency (times/min) Note)1	Without option	No limit Note)2	
	DV0P4282	No limit Note)2	
Rated rotational speed (r/min)		3000	
Max. rotational speed (r/min)		5000	
Moment of inertia of rotor ($\times10^{-4}$kg·m^2)	Without brake	0.67	
	With brake	0.70	
Recommended moment of inertia ratio of the load and the rotor Note)3		10 times or less	
Rotary encoder specifications Note)5		20-bit Incremental	17-bit Absolute
	Resolution per single turn	1,048,576	131,072

• **Brake specifications** (For details, refer to P.105)
(This brake will be released when it is energized. Do not use this for braking the motor in motion.)

Static friction torque (N·m)	1.27 or more
Engaging time (ms)	50 or less
Releasing time (ms) Note)4	15 or less
Exciting current (DC) (A)	0.36
Releasing voltage (DC) (V)	1 or more
Exciting voltage (DC) (V)	24±1.2

• **Permissible load** (For details, refer to P.104)

During assembly	Radial load P-direction (N)	392
	Thrust load A-direction (N)	147
	Thrust load B-direction (N)	196
During operation	Radial load P-direction (N)	245
	Thrust load A, B-direction (N)	98

• For details of Note 1 to Note 5, refer to P.104.
• Dimensions of Driver, refer to P.31.
*1 Rotaly encoder specifications: □
*2 The product that the end of driver model designation has "E" is "positioning type".
Detail of model designation, refer to P.11.

Torque characteristics (at AC100V of power voltage <Dotted line represents the torque at 10% less supply voltage.>)

Without oil seal

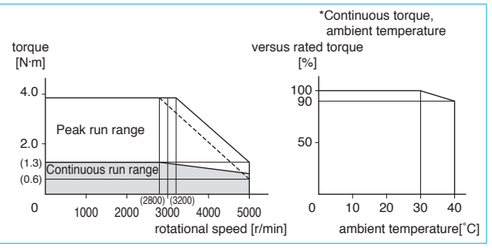

With oil seal

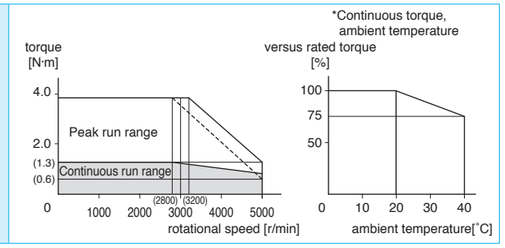

Dimensions

<Without Brake>

Mass (kg)/ 1.4

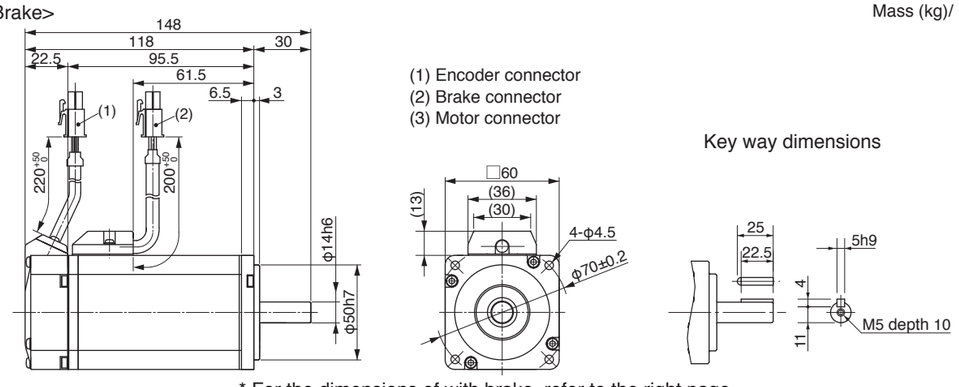

* For the dimensions of with brake, refer to the right page.

<Cautions> Reduce the moment of inertia ratio if high speed response operation is required.
Dimensions are subject to change without notice. Contact us or a dealer for the latest information.
Read the Instruction Manual carefully and understand all precautions and remarks before using the products.

Motor Specifications 200V MHMD 400W [High inertia, Small capacity]

Specifications

		AC200V	
Motor model *1	MHMD	042G1□	042S1□
Applicable driver *2	Model No. A5 series	MBDHT2510	
	Model No. A5E series	MBDHT2510E	
	Frame symbol	B-frame	
Power supply capacity (kVA)		0.9	
Rated output (W)		400	
Rated torque (N·m)		1.3	
Momentary Max. peak torque (N·m)		3.8	
Rated current (A(rms))		2.6	
Max. current (A(o-p))		19.5	
Regenerative brake frequency (times/min) Note)1	Without option	No limit Note)2	
	DV0P4283	No limit Note)2	
Rated rotational speed (r/min)		3000	
Max. rotational speed (r/min)		5000	
Moment of inertia of rotor ($\times10^{-4}$kg·m^2)	Without brake	0.67	
	With brake	0.70	
Recommended moment of inertia ratio of the load and the rotor Note)3		10 times or less	
Rotary encoder specifications Note)5		20-bit Incremental	17-bit Absolute
	Resolution per single turn	1,048,576	131,072

• **Brake specifications** (For details, refer to P.105)
(This brake will be released when it is energized. Do not use this for braking the motor in motion.)

Static friction torque (N·m)	1.27 or more
Engaging time (ms)	50 or less
Releasing time (ms) Note)4	15 or less
Exciting current (DC) (A)	0.36
Releasing voltage (DC) (V)	1 or more
Exciting voltage (DC) (V)	24±1.2

• **Permissible load** (For details, refer to P.104)

During assembly	Radial load P-direction (N)	392
	Thrust load A-direction (N)	147
	Thrust load B-direction (N)	196
During operation	Radial load P-direction (N)	245
	Thrust load A, B-direction (N)	98

• For details of Note 1 to Note 5, refer to P.104.
• Dimensions of Driver, refer to P.30.
*1 Rotaly encoder specifications: □
*2 The product that the end of driver model designation has "E" is "positioning type".
Detail of model designation, refer to P.11.

Torque characteristics (at AC200V of power voltage <Dotted line represents the torque at 10% less supply voltage.>)

Without oil seal

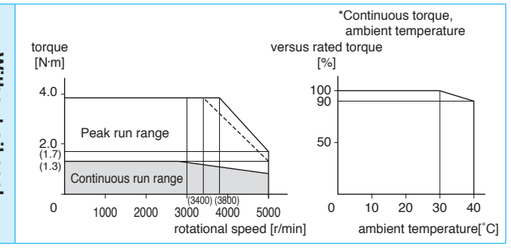

With oil seal

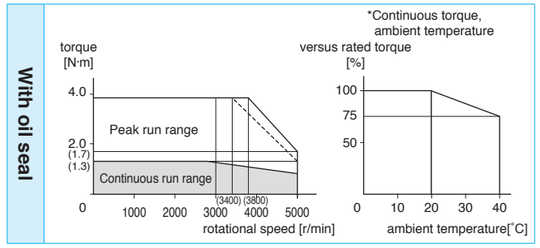

Dimensions

<With Brake>

Mass (kg)/ 1.8

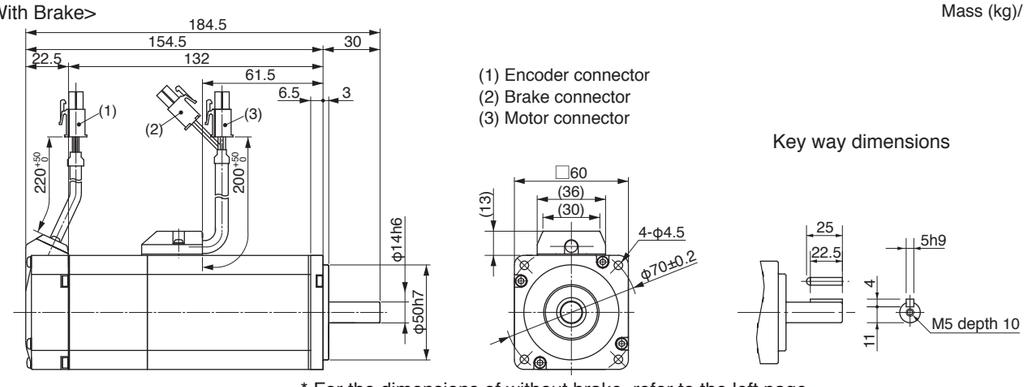

* For the dimensions of without brake, refer to the left page.

<Cautions> Reduce the moment of inertia ratio if high speed response operation is required.
Dimensions are subject to change without notice. Contact us or a dealer for the latest information.
Read the Instruction Manual carefully and understand all precautions and remarks before using the products.

Specifications

			AC200V	
Motor model *1		MHMD	082G1□	082S1□
Applicable driver *2	Model No.	A5 series	MCDHT3520	
		A5E series	MCDHT3520E	
	Frame symbol		C-frame	
Power supply capacity		(kVA)	1.3	
Rated output		(W)	750	
Rated torque		(N·m)	2.4	
Momentary Max. peak torque		(N·m)	7.1	
Rated current		(A(rms))	4.0	
Max. current		(A(o-p))	17.0	
Regenerative brake frequency (times/min) Note)1	Without option		No limit Note)2	
	DV0P4283		No limit Note)2	
Rated rotational speed		(r/min)	3000	
Max. rotational speed		(r/min)	4500	
Moment of inertia of rotor ($\times10^{-4}$kg·m^2)	Without brake		1.51	
	With brake		1.61	
Recommended moment of inertia ratio of the load and the rotor Note)3			10 times or less	
Rotary encoder specifications Note)5			20-bit Incremental	17-bit Absolute
	Resolution per single turn		1,048,576	131,072

• **Brake specifications** (For details, refer to P.105)
(This brake will be released when it is energized.
Do not use this for braking the motor in motion.)

Static friction torque (N·m)	2.45 or more
Engaging time (ms)	70 or less
Releasing time (ms) Note)4	20 or less
Exciting current (DC) (A)	0.42
Releasing voltage (DC) (V)	1 or more
Exciting voltage (DC) (V)	24±1.2

• **Permissible load** (For details, refer to P.104)

During assembly	Radial load P-direction (N)	686
	Thrust load A-direction (N)	294
	Thrust load B-direction (N)	392
During operation	Radial load P-direction (N)	392
	Thrust load A, B-direction (N)	147

• For details of Note 1 to Note 5, refer to P.104.
• Dimensions of Driver, refer to P.31.
*1 Rotaly encoder specifications: □
*2 The product that the end of driver model designation has "E" is "positioning type".
Detail of model designation, refer to P.11.

Torque characteristics (at AC200V of power voltage <Dotted line represents the torque at 10% less supply voltage.>)

Without oil seal

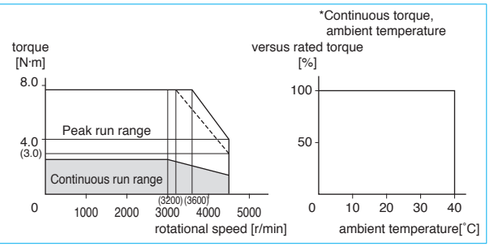

With oil seal

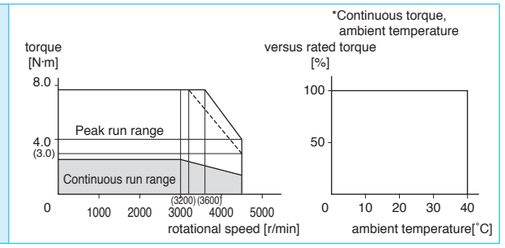

Dimensions

Mass (kg)/ Without brake: 2.5
With brake: 3.5

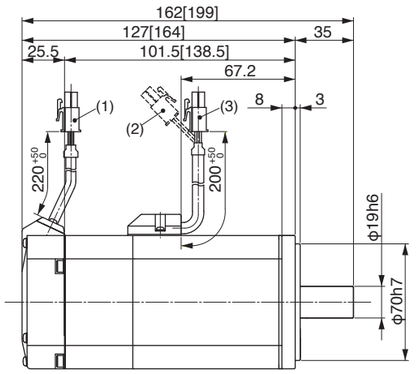

(1) Encoder connector
(2) Brake connector
(3) Motor connector

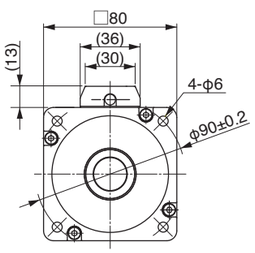

Key way dimensions

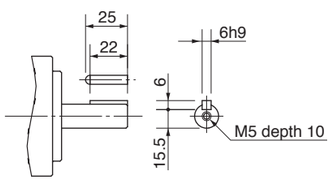

* Figures in [ ] represent the dimensions of with brake.

<Cautions> Reduce the moment of inertia ratio if high speed response operation is required.
Dimensions are subject to change without notice. Contact us or a dealer for the latest information.
Read the Instruction Manual carefully and understand all precautions and remarks before using the products.

MEMO

Motor Specifications 400V MSME 1.0kW [Low inertia, Middle capacity]

Specifications

			AC400V	
Motor model *1		MSME	104G1□	104S1□
Applicable driver *2	Model No.	A5 series	MDDHT3420	
		A5E series	MDDHT3420E	
	Frame symbol		D-frame	
Power supply capacity		(kVA)	1.8	
Rated output		(W)	1.0	
Rated torque		(N·m)	3.18	
Momentary Max. peak torque		(N·m)	9.55	
Rated current		(A(rms))	3.3	
Max. current		(A(o-p))	14	
Regenerative brake frequency (times/min) Note)1	Without option		No limit Note)2	
	DV0PM20048		No limit Note)2	
Rated rotational speed		(r/min)	3000	
Max. rotational speed		(r/min)	5000	
Moment of inertia of rotor ($\times10^{-4}$kg·m^2)	Without brake		2.03	
	With brake		2.35	
Recommended moment of inertia ratio of the load and the rotor Note)3			0 times or less	
Rotary encoder specifications Note)5			20-bit Incremental	17-bit Absolute
	Resolution per single turn		1,048,576	131,072

• **Brake specifications** (For details, refer to P.105)
(This brake will be released when it is energized.
Do not use this for braking the motor in motion.)

Static friction torque (N·m)	7.8 or more
Engaging time (ms)	50 or less
Releasing time (ms) Note)4	15 or less
Exciting current (DC) (A)	0.81±10%
Releasing voltage (DC) (V)	2 or more
Exciting voltage (DC) (V)	24±2.4

• **Permissible load** (For details, refer to P.104)

During assembly	Radial load P-direction (N)	980
	Thrust load A-direction (N)	588
	Thrust load B-direction (N)	686
During operation	Radial load P-direction (N)	490
	Thrust load A, B-direction (N)	196

• For details of Note 1 to Note 5, refer to P.104.
• Dimensions of Driver, refer to P.32.
*1 Rotaly encoder specifications: □
*2 The product that the end of driver model designation has "E" is "positioning type".
Detail of model designation, refer to P.11.

Torque characteristics (at AC400V of power voltage <Dotted line represents the torque at 10% less supply voltage.>)

With oil seal

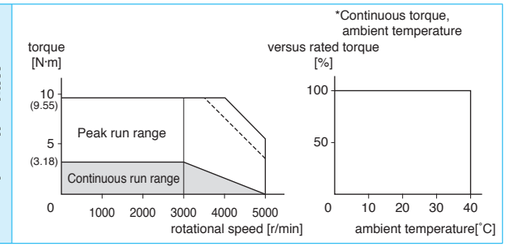

Dimensions

Mass (kg)/ Without brake: 3.5
With brake: 4.5

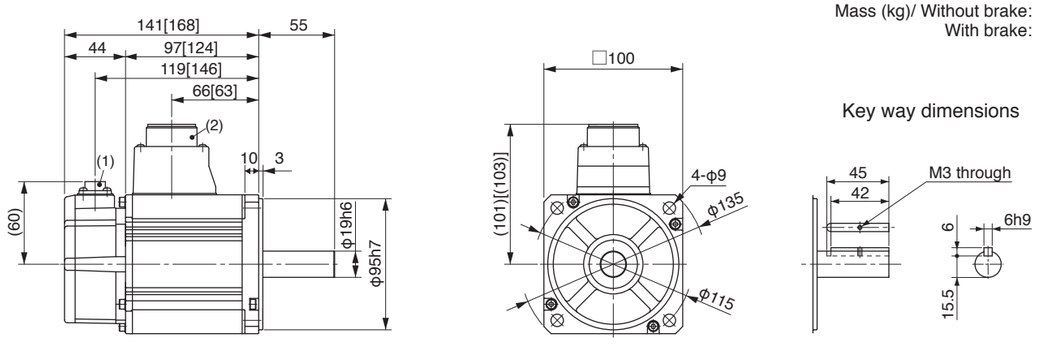

(1) Encoder connector
(2) Motor/Brake connector

* Figures in [ ] represent the dimensions of with brake.

<Cautions> Reduce the moment of inertia ratio if high speed response operation is required.
Dimensions are subject to change without notice. Contact us or a dealer for the latest information.
Read the Instruction Manual carefully and understand all precautions and remarks before using the products.

Motor Specifications 400V MSME 1.5kW [Low inertia, Middle capacity]

Specifications

			AC400V	
Motor model *1		MSME	154G1□	154S1□
Applicable driver *2	Model No.	A5 series	MDDHT3420	
		A5E series	MDDHT3420E	
	Frame symbol		D-frame	
Power supply capacity		(kVA)	2.3	
Rated output		(W)	1.5	
Rated torque		(N·m)	4.77	
Momentary Max. peak torque		(N·m)	14.3	
Rated current		(A(rms))	4.2	
Max. current		(A(o-p))	18	
Regenerative brake frequency (times/min) Note)1	Without option		No limit Note)2	
	DV0PM20048		No limit Note)2	
Rated rotational speed		(r/min)	3000	
Max. rotational speed		(r/min)	5000	
Moment of inertia of rotor ($\times10^{-4}$kg·m^2)	Without brake		2.84	
	With brake		3.17	
Recommended moment of inertia ratio of the load and the rotor Note)3			0 times or less	
Rotary encoder specifications Note)5			20-bit Incremental	17-bit Absolute
	Resolution per single turn		1,048,576	131,072

• **Brake specifications** (For details, refer to P.105)
(This brake will be released when it is energized.
Do not use this for braking the motor in motion.)

Static friction torque (N·m)	7.8 or more
Engaging time (ms)	50 or less
Releasing time (ms) Note)4	15 or less
Exciting current (DC) (A)	0.81±10%
Releasing voltage (DC) (V)	2 or more
Exciting voltage (DC) (V)	24±2.4

• **Permissible load** (For details, refer to P.104)

During assembly	Radial load P-direction (N)	980
	Thrust load A-direction (N)	588
	Thrust load B-direction (N)	686
During operation	Radial load P-direction (N)	490
	Thrust load A, B-direction (N)	196

• For details of Note 1 to Note 5, refer to P.104.
• Dimensions of Driver, refer to P.32.
*1 Rotaly encoder specifications: □
*2 The product that the end of driver model designation has "E" is "positioning type".
Detail of model designation, refer to P.11.

Torque characteristics (at AC400V of power voltage <Dotted line represents the torque at 10% less supply voltage.>)

With oil seal

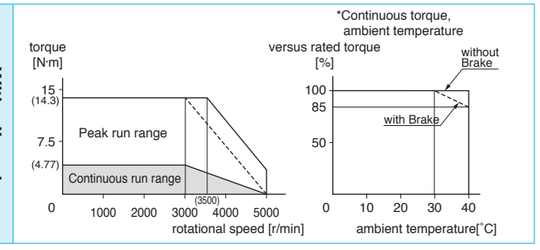

Dimensions

Mass (kg)/ Without brake: 4.4
With brake: 5.4

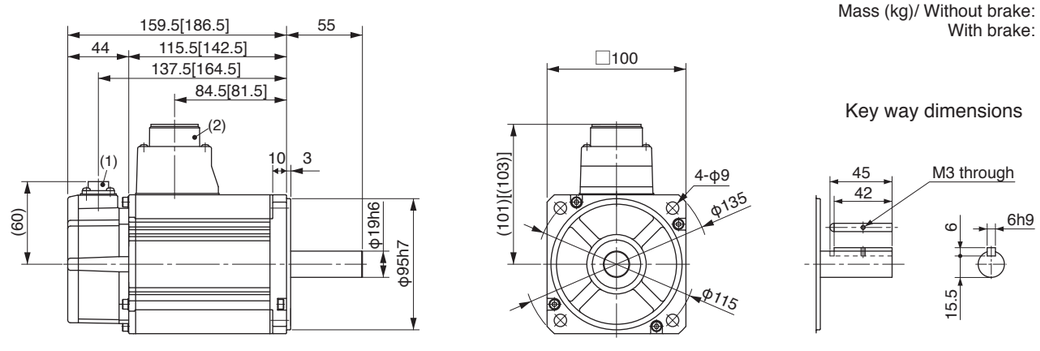

(1) Encoder connector
(2) Motor/Brake connector

* Figures in [ ] represent the dimensions of with brake.

<Cautions> Reduce the moment of inertia ratio if high speed response operation is required.
Dimensions are subject to change without notice. Contact us or a dealer for the latest information.
Read the Instruction Manual carefully and understand all precautions and remarks before using the products.

Motor Specifications 400V MSME 2.0kW [Low inertia, Middle capacity]

Specifications

			AC400V	
Motor model *1		MSME	204G1□	204S1□
Applicable driver *2	Model No.	A5 series	MEDHT4430	
		A5E series	MEDHT4430E	
	Frame symbol		E-frame	
Power supply capacity (kVA)			3.3	
Rated output (W)			2.0	
Rated torque (N·m)			6.37	
Momentary Max. peak torque (N·m)			19.1	
Rated current (A(rms))			5.7	
Max. current (A(o-p))			24	
Regenerative brake frequency (times/min) Note)1	Without option		No limit Note)2	
	DV0PM20049		No limit Note)2	
Rated rotational speed (r/min)			3000	
Max. rotational speed (r/min)			5000	
Moment of inertia of rotor ($\times10^{-4}$kg·m^2)	Without brake		3.68	
	With brake		4.01	
Recommended moment of inertia ratio of the load and the rotor Note)3			0 times or less	
Rotary encoder specifications Note)5			20-bit Incremental	17-bit Absolute
	Resolution per single turn		1,048,576	131,072

• **Brake specifications** (For details, refer to P.105)
(This brake will be released when it is energized.
Do not use this for braking the motor in motion.)

Static friction torque (N·m)	7.8 or more
Engaging time (ms)	50 or less
Releasing time (ms) Note)4	15 or less
Exciting current (DC) (A)	0.81±10%
Releasing voltage (DC) (V)	2 or more
Exciting voltage (DC) (V)	24±2.4

• **Permissible load** (For details, refer to P.104)

During assembly	Radial load P-direction (N)	980
	Thrust load A-direction (N)	588
	Thrust load B-direction (N)	686
During operation	Radial load P-direction (N)	490
	Thrust load A, B-direction (N)	196

• For details of Note 1 to Note 5, refer to P.104.
• Dimensions of Driver, refer to P.33.
*1 Rotaly encoder specifications: □
*2 The product that the end of driver model designation has "E" is "positioning type".
Detail of model designation, refer to P.11.

Torque characteristics (at AC400V of power voltage <Dotted line represents the torque at 10% less supply voltage.>)

With oil seal

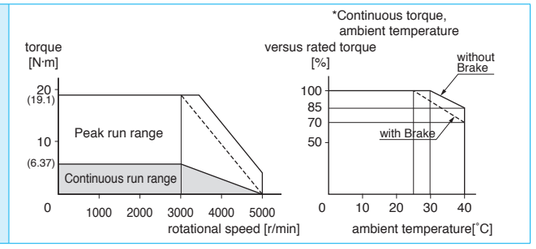

Dimensions

Mass (kg)/ Without brake: 5.3
With brake: 6.3

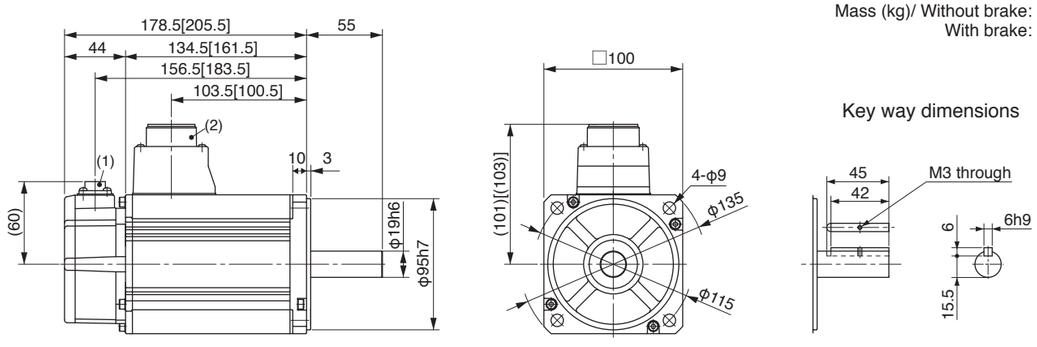

(1) Encoder connector
(2) Motor/Brake connector

* Figures in [ ] represent the dimensions of with brake.

<Cautions> Reduce the moment of inertia ratio if high speed response operation is required.
Dimensions are subject to change without notice. Contact us or a dealer for the latest information.
Read the Instruction Manual carefully and understand all precautions and remarks before using the products.

Motor Specifications 400V MSME 3.0kW [Low inertia, Middle capacity]

Specifications

			AC400V	
Motor model *1		MSME	304G1□	304S1□
Applicable driver *2	Model No.	A5 series	MFDHT5440	
		A5E series	MFDHT5440E	
	Frame symbol		F-frame	
Power supply capacity (kVA)			4.5	
Rated output (kW)			3.0	
Rated torque (N·m)			9.55	
Momentary Max. peak torque (N·m)			28.6	
Rated current (A(rms))			9.2	
Max. current (A(o-p))			39	
Regenerative brake frequency (times/min) Note)1	Without option		No limit Note)2	
	DV0PM20049×2		No limit Note)2	
Rated rotational speed (r/min)			3000	
Max. rotational speed (r/min)			5000	
Moment of inertia of rotor ($\times10^{-4}$kg·m^2)	Without brake		6.50	
	With brake		7.85	
Recommended moment of inertia ratio of the load and the rotor Note)3			0 times or less	
Rotary encoder specifications Note)5			20-bit Incremental	17-bit Absolute
	Resolution per single turn		1,048,576	131,072

• **Brake specifications** (For details, refer to P.105)
(This brake will be released when it is energized.
Do not use this for braking the motor in motion.)

Static friction torque (N·m)	11.8 or more
Engaging time (ms)	80 or less
Releasing time (ms) Note)4	15 or less
Exciting current (DC) (A)	0.81±10%
Releasing voltage (DC) (V)	2 or more
Exciting voltage (DC) (V)	24±2.4

• **Permissible load** (For details, refer to P.104)

During assembly	Radial load P-direction (N)	980
	Thrust load A-direction (N)	588
	Thrust load B-direction (N)	686
During operation	Radial load P-direction (N)	490
	Thrust load A, B-direction (N)	196

• For details of Note 1 to Note 5, refer to P.104.
• Dimensions of Driver, refer to P.34.
*1 Rotaly encoder specifications: □
*2 The product that the end of driver model designation has "E" is "positioning type".
Detail of model designation, refer to P.11.

Torque characteristics (at AC400V of power voltage <Dotted line represents the torque at 10% less supply voltage.>)

With oil seal

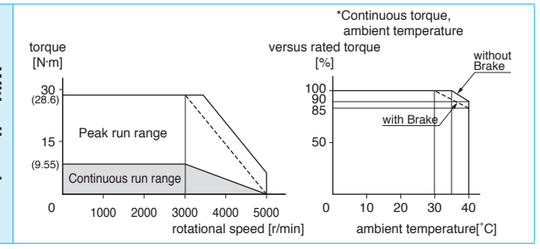

Dimensions

Mass (kg)/ Without brake: 8.3
With brake: 9.4

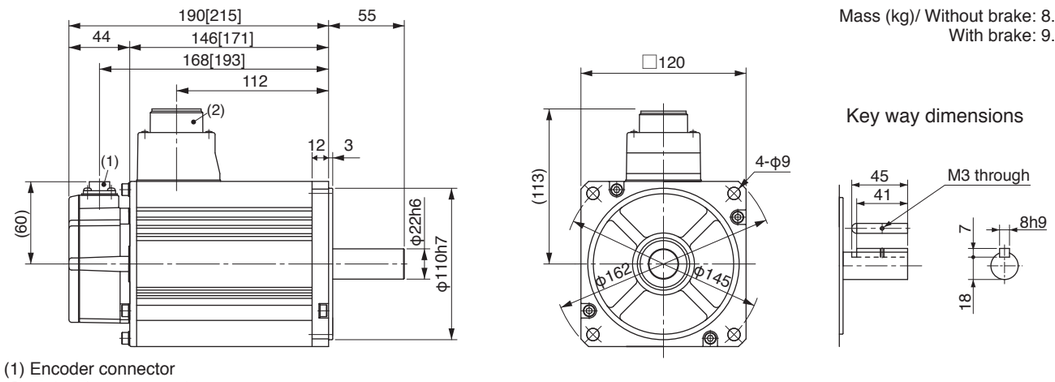

(1) Encoder connector
(2) Motor/Brake connector

* Figures in [ ] represent the dimensions of with brake.

<Cautions> Reduce the moment of inertia ratio if high speed response operation is required.
Dimensions are subject to change without notice. Contact us or a dealer for the latest information.
Read the Instruction Manual carefully and understand all precautions and remarks before using the products.

Motor Specifications 400V MSME 4.0kW [Low inertia, Middle capacity]

Specifications

			AC400V	
Motor model *1		MSME	404G1□	404S1□
Applicable driver *2	Model No.	A5 series	MFDHTA464	
		A5E series	MFDHTA464E	
	Frame symbol		F-frame	
Power supply capacity (kVA)			6.8	
Rated output (kW)			4.0	
Rated torque (N·m)			12.7	
Momentary Max. peak torque (N·m)			38.2	
Rated current (A(rms))			9.9	
Max. current (A(o-p))			42	
Regenerative brake frequency (times/min) Note)1	Without option		No limit Note)2	
	DV0PM20049×2		No limit Note)2	
Rated rotational speed (r/min)			3000	
Max. rotational speed (r/min)			4500	
Moment of inertia of rotor ($\times10^{-4}$kg·m^2)	Without brake		12.9	
	With brake		14.2	
Recommended moment of inertia ratio of the load and the rotor Note)3			0 times or less	
Rotary encoder specifications Note)5			20-bit Incremental	17-bit Absolute
	Resolution per single turn		1,048,576	131,072

• **Brake specifications** (For details, refer to P.105)
(This brake will be released when it is energized.
Do not use this for braking the motor in motion.)

Static friction torque (N·m)	16.1 or more
Engaging time (ms)	110 or less
Releasing time (ms) Note)4	50 or less
Exciting current (DC) (A)	0.90±10%
Releasing voltage (DC) (V)	2 or more
Exciting voltage (DC) (V)	24±2.4

• **Permissible load** (For details, refer to P.104)

During assembly	Radial load P-direction (N)	980
	Thrust load A-direction (N)	588
	Thrust load B-direction (N)	686
During operation	Radial load P-direction (N)	784
	Thrust load A, B-direction (N)	343

• For details of Note 1 to Note 5, refer to P.104.
• Dimensions of Driver, refer to P.34.
*1 Rotaly encoder specifications: □
*2 The product that the end of driver model designation has "E" is "positioning type".
Detail of model designation, refer to P.11.

Torque characteristics (at AC400V of power voltage <Dotted line represents the torque at 10% less supply voltage.>)

With oil seal

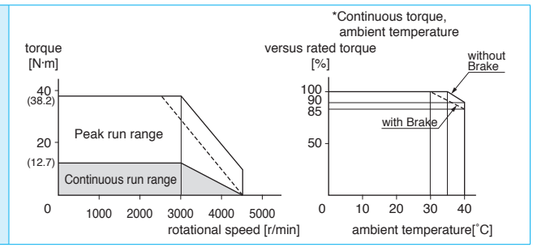

Dimensions

Mass (kg)/ Without brake: 11.0
With brake: 12.6

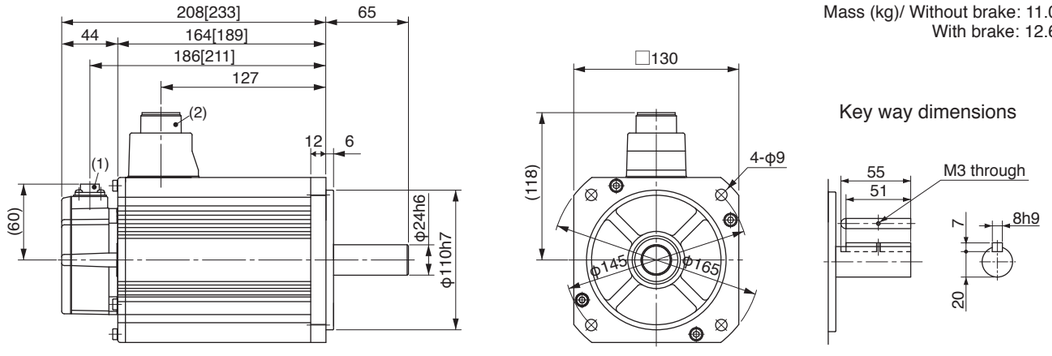

(1) Encoder connector
(2) Motor/Brake connector

* Figures in [ ] represent the dimensions of with brake.

<Cautions> Reduce the moment of inertia ratio if high speed response operation is required.
Dimensions are subject to change without notice. Contact us or a dealer for the latest information.
Read the Instruction Manual carefully and understand all precautions and remarks before using the products.

Motor Specifications 400V MSME 5.0kW [Low inertia, Middle capacity]

Specifications

			AC400V	
Motor model *1		MSME	504G1□	504S1□
Applicable driver *2	Model No.	A5 series	MFDHTA464	
		A5E series	MFDHTA464E	
	Frame symbol		F-frame	
Power supply capacity (kVA)			7.5	
Rated output (kW)			5.0	
Rated torque (N·m)			15.9	
Momentary Max. peak torque (N·m)			47.7	
Rated current (A(rms))			12.0	
Max. current (A(o-p))			51	
Regenerative brake frequency (times/min) Note)1	Without option		357	
	DV0PM20049×2		No limit Note)2	
Rated rotational speed (r/min)			3000	
Max. rotational speed (r/min)			4500	
Moment of inertia of rotor ($\times10^{-4}$kg·m^2)	Without brake		17.4	
	With brake		18.6	
Recommended moment of inertia ratio of the load and the rotor Note)3			0 times or less	
Rotary encoder specifications Note)5			20-bit Incremental	17-bit Absolute
	Resolution per single turn		1,048,576	131,072

• **Brake specifications** (For details, refer to P.105)
(This brake will be released when it is energized.
Do not use this for braking the motor in motion.)

Static friction torque (N·m)	16.1 or more
Engaging time (ms)	110 or less
Releasing time (ms) Note)4	50 or less
Exciting current (DC) (A)	0.90±10%
Releasing voltage (DC) (V)	2 or more
Exciting voltage (DC) (V)	24±2.4

• **Permissible load** (For details, refer to P.104)

During assembly	Radial load P-direction (N)	980
	Thrust load A-direction (N)	588
	Thrust load B-direction (N)	686
During operation	Radial load P-direction (N)	784
	Thrust load A, B-direction (N)	343

• For details of Note 1 to Note 5, refer to P.104.
• Dimensions of Driver, refer to P.34.
*1 Rotaly encoder specifications: □
*2 The product that the end of driver model designation has "E" is "positioning type".
Detail of model designation, refer to P.11.

Torque characteristics (at AC400V of power voltage <Dotted line represents the torque at 10% less supply voltage.>)

With oil seal

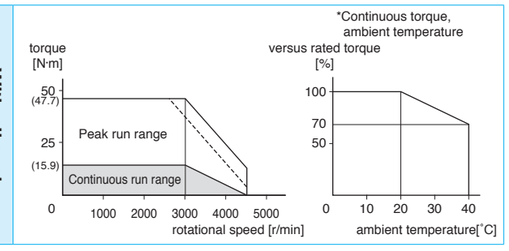

Dimensions

Mass (kg)/ Without brake: 14.0
With brake: 16.0

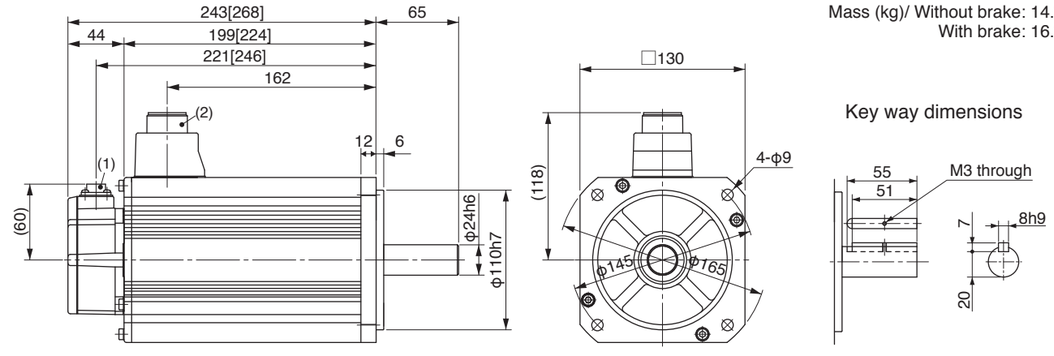

(1) Encoder connector
(2) Motor/Brake connector

* Figures in [ ] represent the dimensions of with brake.

<Cautions> Reduce the moment of inertia ratio if high speed response operation is required.
Dimensions are subject to change without notice. Contact us or a dealer for the latest information.
Read the Instruction Manual carefully and understand all precautions and remarks before using the products.

Motor Specifications 400V MDME 1.0kW [Middle inertia, Middle capacity]

Specifications

		AC400V	
Motor model *1	MDME	104G1□	104S1□
Applicable driver *2	Model No. A5 series	MDDHT2412	
	Model No. A5E series	MDDHT2412E	
	Frame symbol	D-frame	
Power supply capacity (kVA)		1.8	
Rated output (W)		1.0	
Rated torque (N·m)		4.77	
Momentary Max. peak torque (N·m)		14.3	
Rated current (A(rms))		2.8	
Max. current (A(o-p))		12	
Regenerative brake frequency (times/min) Note)1	Without option	No limit Note)2	
	DV0PM20048	No limit Note)2	
Rated rotational speed (r/min)		2000	
Max. rotational speed (r/min)		3000	
Moment of inertia of rotor ($\times10^{-4}$kg·m^2)	Without brake	4.60	
	With brake	5.90	
Recommended moment of inertia ratio of the load and the rotor Note)3		0 times or less	
Rotary encoder specifications Note)5		20-bit Incremental	17-bit Absolute
	Resolution per single turn	1,048,576	131,072

• **Brake specifications** (For details, refer to P.105)
(This brake will be released when it is energized. Do not use this for braking the motor in motion.)

Static friction torque (N·m)	4.9 or more
Engaging time (ms)	80 or less
Releasing time (ms) Note)4	70 or less
Exciting current (DC) (A)	0.59±10%
Releasing voltage (DC) (V)	2 or more
Exciting voltage (DC) (V)	24±2.4

• **Permissible load** (For details, refer to P.104)

During assembly	Radial load P-direction (N)	980
	Thrust load A-direction (N)	588
	Thrust load B-direction (N)	686
During operation	Radial load P-direction (N)	490
	Thrust load A, B-direction (N)	196

• For details of Note 1 to Note 5, refer to P.104.
• Dimensions of Driver, refer to P.32.
*1 Rotaly encoder specifications: □
*2 The product that the end of driver model designation has "E" is "positioning type".
Detail of model designation, refer to P.11.

Torque characteristics (at AC400V of power voltage <Dotted line represents the torque at 10% less supply voltage.>)

With oil seal

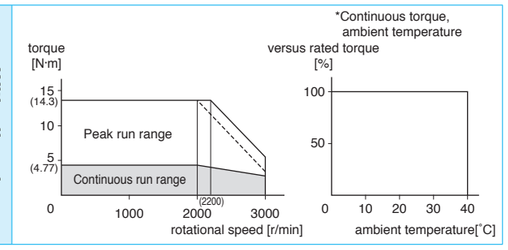

Dimensions

Mass (kg)/ Without brake: 5.2
With brake: 6.7

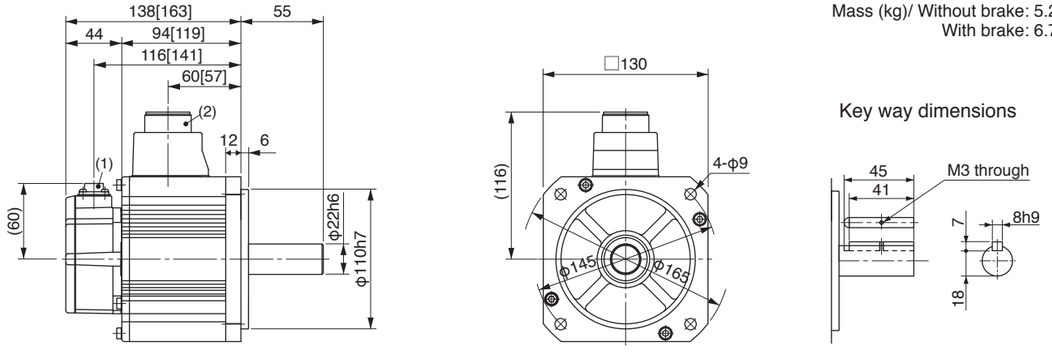

(1) Encoder connector
(2) Motor/Brake connector

* Figures in [ ] represent the dimensions of with brake.

<Cautions> Reduce the moment of inertia ratio if high speed response operation is required.
Dimensions are subject to change without notice. Contact us or a dealer for the latest information.
Read the Instruction Manual carefully and understand all precautions and remarks before using the products.

Motor Specifications 400V MDME 1.5kW [Middle inertia, Middle capacity]

Specifications

		AC400V	
Motor model *1	MDME	154G1□	154S1□
Applicable driver *2	Model No. A5 series	MDDHT3420	
	Model No. A5E series	MDDHT3420E	
	Frame symbol	D-frame	
Power supply capacity (kVA)		2.3	
Rated output (W)		1.5	
Rated torque (N·m)		7.16	
Momentary Max. peak torque (N·m)		21.5	
Rated current (A(rms))		4.7	
Max. current (A(o-p))		20	
Regenerative brake frequency (times/min) Note)1	Without option	No limit Note)2	
	DV0PM20048	No limit Note)2	
Rated rotational speed (r/min)		2000	
Max. rotational speed (r/min)		3000	
Moment of inertia of rotor ($\times10^{-4}$kg·m^2)	Without brake	6.70	
	With brake	7.99	
Recommended moment of inertia ratio of the load and the rotor Note)3		0 times or less	
Rotary encoder specifications Note)5		20-bit Incremental	17-bit Absolute
	Resolution per single turn	1,048,576	131,072

• **Brake specifications** (For details, refer to P.105)
(This brake will be released when it is energized. Do not use this for braking the motor in motion.)

Static friction torque (N·m)	13.7 or more
Engaging time (ms)	100 or less
Releasing time (ms) Note)4	50 or less
Exciting current (DC) (A)	0.79±10%
Releasing voltage (DC) (V)	2 or more
Exciting voltage (DC) (V)	24±2.4

• **Permissible load** (For details, refer to P.104)

During assembly	Radial load P-direction (N)	980
	Thrust load A-direction (N)	588
	Thrust load B-direction (N)	686
During operation	Radial load P-direction (N)	490
	Thrust load A, B-direction (N)	196

• For details of Note 1 to Note 5, refer to P.104.
• Dimensions of Driver, refer to P.32.
*1 Rotaly encoder specifications: □
*2 The product that the end of driver model designation has "E" is "positioning type".
Detail of model designation, refer to P.11.

Torque characteristics (at AC400V of power voltage <Dotted line represents the torque at 10% less supply voltage.>)

With oil seal

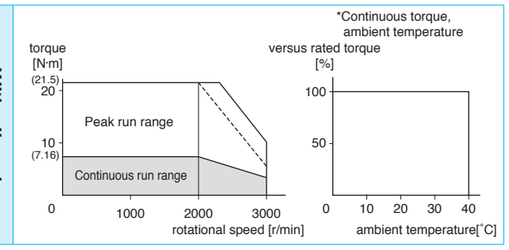

Dimensions

Mass (kg)/ Without brake: 6.7
With brake: 8.2

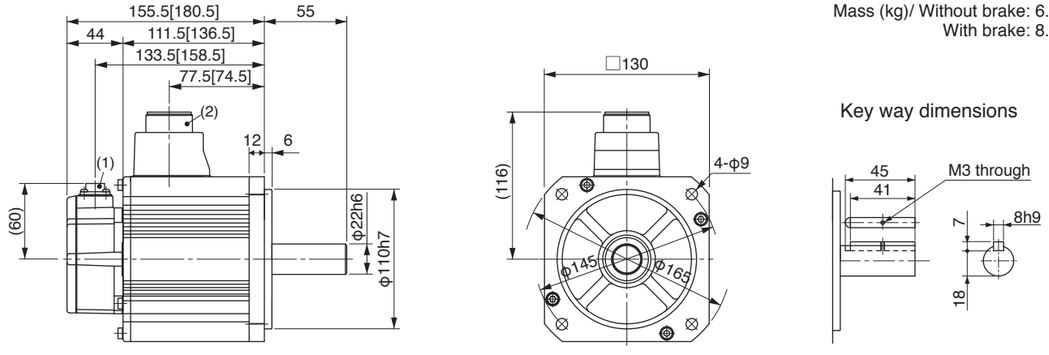

(1) Encoder connector
(2) Motor/Brake connector

* Figures in [ ] represent the dimensions of with brake.

<Cautions> Reduce the moment of inertia ratio if high speed response operation is required.
Dimensions are subject to change without notice. Contact us or a dealer for the latest information.
Read the Instruction Manual carefully and understand all precautions and remarks before using the products.

Motor Specifications 400V MDME 2.0kW [Middle inertia, Middle capacity]

Specifications

		AC400V	
Motor model *1	MDME	204G1□	204S1□
Applicable driver *2	Model No. A5 series	MEDHT4430	
	Model No. A5E series	MEDHT4430E	
	Frame symbol	E-frame	
Power supply capacity (kVA)		3.3	
Rated output (W)		2.0	
Rated torque (N·m)		9.55	
Momentary Max. peak torque (N·m)		28.6	
Rated current (A(rms))		5.9	
Max. current (A(o-p))		25	
Regenerative brake frequency (times/min) Note)1	Without option	No limit Note)2	
	DV0PM20049	No limit Note)2	
Rated rotational speed (r/min)		2000	
Max. rotational speed (r/min)		3000	
Moment of inertia of rotor ($\times10^{-4}$kg·m^2)	Without brake	8.72	
	With brake	10.0	
Recommended moment of inertia ratio of the load and the rotor Note)3		0 times or less	
Rotary encoder specifications Note)5		20-bit Incremental	17-bit Absolute
	Resolution per single turn	1,048,576	131,072

• **Brake specifications** (For details, refer to P.105)
(This brake will be released when it is energized.
Do not use this for braking the motor in motion.)

Static friction torque (N·m)	13.7 or more
Engaging time (ms)	100 or less
Releasing time (ms) Note)4	50 or less
Exciting current (DC) (A)	0.79±10%
Releasing voltage (DC) (V)	2 or more
Exciting voltage (DC) (V)	24±2.4

• **Permissible load** (For details, refer to P.104)

During assembly	Radial load P-direction (N)	980
	Thrust load A-direction (N)	588
	Thrust load B-direction (N)	686
During operation	Radial load P-direction (N)	490
	Thrust load A, B-direction (N)	196

• For details of Note 1 to Note 5, refer to P.104.
• Dimensions of Driver, refer to P.33.
*1 Rotaly encoder specifications: □
*2 The product that the end of driver model designation has "E" is "positioning type".
Detail of model designation, refer to P.11.

Torque characteristics (at AC400V of power voltage <Dotted line represents the torque at 10% less supply voltage.>)

With oil seal

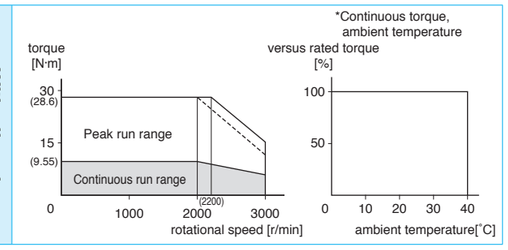

Dimensions

Mass (kg)/ Without brake: 8.0
With brake: 9.5

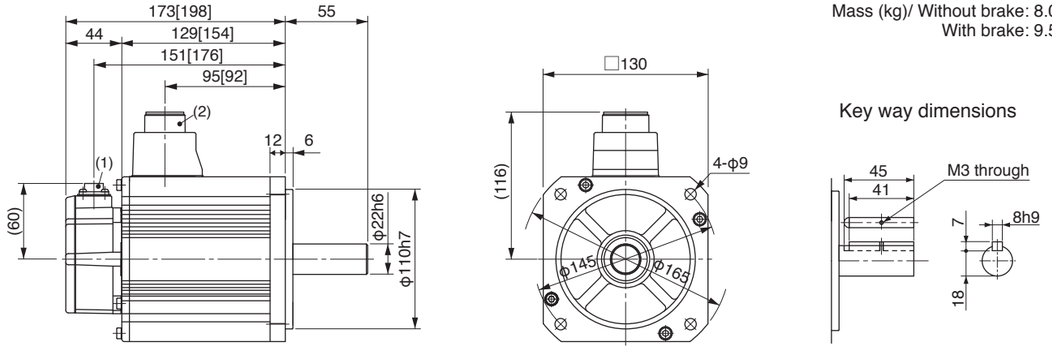

(1) Encoder connector
(2) Motor/Brake connector

* Figures in [ ] represent the dimensions of with brake.

<Cautions> Reduce the moment of inertia ratio if high speed response operation is required.
Dimensions are subject to change without notice. Contact us or a dealer for the latest information.
Read the Instruction Manual carefully and understand all precautions and remarks before using the products.

Motor Specifications 400V MDME 3.0kW [Middle inertia, Middle capacity]

Specifications

		AC400V	
Motor model *1	MDME	304G1□	304S1□
Applicable driver *2	Model No. A5 series	MFDHT5440	
	Model No. A5E series	MFDHT5440E	
	Frame symbol	F-frame	
Power supply capacity (kVA)		4.5	
Rated output (W)		3.0	
Rated torque (N·m)		14.3	
Momentary Max. peak torque (N·m)		43.0	
Rated current (A(rms))		8.7	
Max. current (A(o-p))		37	
Regenerative brake frequency (times/min) Note)1	Without option	No limit Note)2	
	DV0PM20049×2	No limit Note)2	
Rated rotational speed (r/min)		2000	
Max. rotational speed (r/min)		3000	
Moment of inertia of rotor ($\times10^{-4}$kg·m^2)	Without brake	12.9	
	With brake	14.2	
Recommended moment of inertia ratio of the load and the rotor Note)3		0 times or less	
Rotary encoder specifications Note)5		20-bit Incremental	17-bit Absolute
	Resolution per single turn	1,048,576	131,072

• **Brake specifications** (For details, refer to P.105)
(This brake will be released when it is energized.
Do not use this for braking the motor in motion.)

Static friction torque (N·m)	16.2 or more
Engaging time (ms)	110 or less
Releasing time (ms) Note)4	50 or less
Exciting current (DC) (A)	0.90±10%
Releasing voltage (DC) (V)	2 or more
Exciting voltage (DC) (V)	24±2.4

• **Permissible load** (For details, refer to P.104)

During assembly	Radial load P-direction (N)	980
	Thrust load A-direction (N)	588
	Thrust load B-direction (N)	686
During operation	Radial load P-direction (N)	784
	Thrust load A, B-direction (N)	343

• For details of Note 1 to Note 5, refer to P.104.
• Dimensions of Driver, refer to P.34.
*1 Rotaly encoder specifications: □
*2 The product that the end of driver model designation has "E" is "positioning type".
Detail of model designation, refer to P.11.

Torque characteristics (at AC400V of power voltage <Dotted line represents the torque at 10% less supply voltage.>)

With oil seal

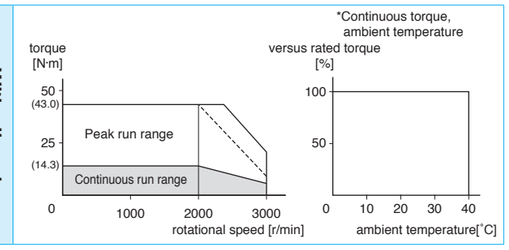

Dimensions

Mass (kg)/ Without brake: 11.0
With brake: 12.6

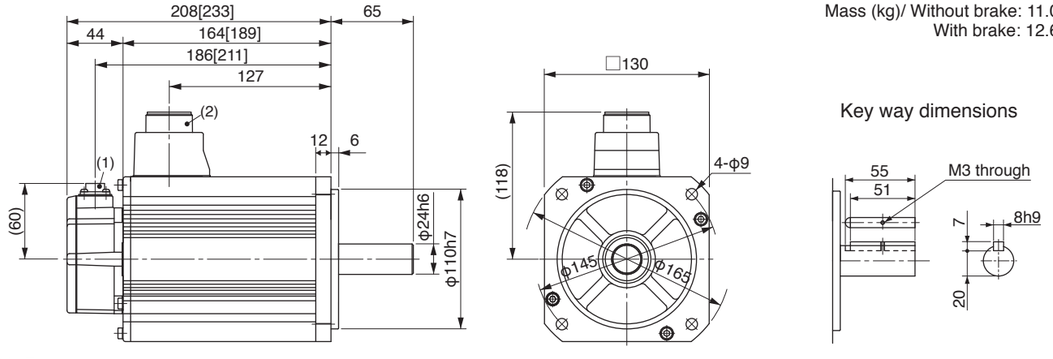

(1) Encoder connector
(2) Motor/Brake connector

* Figures in [ ] represent the dimensions of with brake.

<Cautions> Reduce the moment of inertia ratio if high speed response operation is required.
Dimensions are subject to change without notice. Contact us or a dealer for the latest information.
Read the Instruction Manual carefully and understand all precautions and remarks before using the products.

Motor Specifications 400V MDME 4.0kW [Middle inertia, Middle capacity]

Specifications

		AC400V	
Motor model *1	MDME	404G1□	404S1□
Applicable driver *2	Model No. A5 series	MFDHTA464	
	Model No. A5E series	MFDHTA464E	
	Frame symbol	F-frame	
Power supply capacity (kVA)		6.8	
Rated output (W)		4.0	
Rated torque (N·m)		19.1	
Momentary Max. peak torque (N·m)		57.3	
Rated current (A(rms))		10.6	
Max. current (A(o-p))		45	
Regenerative brake frequency (times/min) Note)1	Without option	No limit Note)2	
	DV0PM20049×2	No limit Note)2	
Rated rotational speed (r/min)		2000	
Max. rotational speed (r/min)		3000	
Moment of inertia of rotor ($\times10^{-4}$kg·m^2)	Without brake	37.6	
	With brake	38.6	
Recommended moment of inertia ratio of the load and the rotor Note)3		0 times or less	
Rotary encoder specifications Note)5		20-bit Incremental	17-bit Absolute
	Resolution per single turn	1,048,576	131,072

• **Brake specifications** (For details, refer to P.105)
(This brake will be released when it is energized.
Do not use this for braking the motor in motion.)

Static friction torque (N·m)	24.5 or more
Engaging time (ms)	80 or less
Releasing time (ms) Note)4	25 or less
Exciting current (DC) (A)	1.3±10%
Releasing voltage (DC) (V)	2 or more
Exciting voltage (DC) (V)	24±2.4

• **Permissible load** (For details, refer to P.104)

During assembly	Radial load P-direction (N)	1666
	Thrust load A-direction (N)	784
	Thrust load B-direction (N)	980
During operation	Radial load P-direction (N)	784
	Thrust load A, B-direction (N)	343

• For details of Note 1 to Note 5, refer to P.104.
• Dimensions of Driver, refer to P.34.
*1 Rotaly encoder specifications: □
*2 The product that the end of driver model designation has "E" is "positioning type".
Detail of model designation, refer to P.11.

Torque characteristics (at AC400V of power voltage <Dotted line represents the torque at 10% less supply voltage.>)

With oil seal

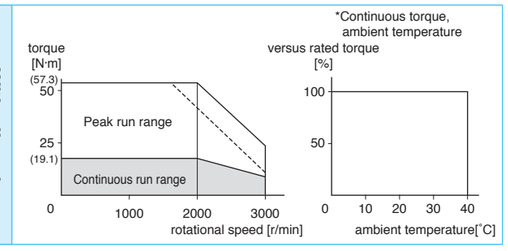

Dimensions

Mass (kg)/ Without brake: 15.5
With brake: 18.7

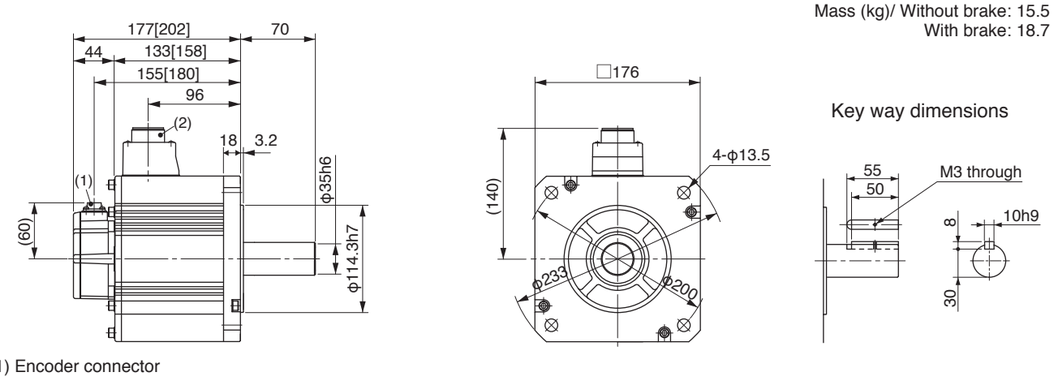

(1) Encoder connector
(2) Motor/Brake connector

* Figures in [ ] represent the dimensions of with brake.

<Cautions> Reduce the moment of inertia ratio if high speed response operation is required.
Dimensions are subject to change without notice. Contact us or a dealer for the latest information.
Read the Instruction Manual carefully and understand all precautions and remarks before using the products.

Motor Specifications 400V MDME 5.0kW [Middle inertia, Middle capacity]

Specifications

		AC400V	
Motor model *1	MDME	504G1□	504S1□
Applicable driver *2	Model No. A5 series	MFDHTA464	
	Model No. A5E series	MFDHTA464E	
	Frame symbol	F-frame	
Power supply capacity (kVA)		7.5	
Rated output (W)		5.0	
Rated torque (N·m)		23.9	
Momentary Max. peak torque (N·m)		71.6	
Rated current (A(rms))		13.0	
Max. current (A(o-p))		55	
Regenerative brake frequency (times/min) Note)1	Without option	120	
	DV0PM20049×2	No limit Note)2	
Rated rotational speed (r/min)		2000	
Max. rotational speed (r/min)		3000	
Moment of inertia of rotor ($\times10^{-4}$kg·m^2)	Without brake	48.0	
	With brake	48.8	
Recommended moment of inertia ratio of the load and the rotor Note)3		0 times or less	
Rotary encoder specifications Note)5		20-bit Incremental	17-bit Absolute
	Resolution per single turn	1,048,576	131,072

• **Brake specifications** (For details, refer to P.105)
(This brake will be released when it is energized.
Do not use this for braking the motor in motion.)

Static friction torque (N·m)	24.5 or more
Engaging time (ms)	80 or less
Releasing time (ms) Note)4	25 or less
Exciting current (DC) (A)	1.3±10%
Releasing voltage (DC) (V)	2 or more
Exciting voltage (DC) (V)	24±2.4

• **Permissible load** (For details, refer to P.104)

During assembly	Radial load P-direction (N)	1666
	Thrust load A-direction (N)	784
	Thrust load B-direction (N)	980
During operation	Radial load P-direction (N)	784
	Thrust load A, B-direction (N)	343

• For details of Note 1 to Note 5, refer to P.104.
• Dimensions of Driver, refer to P.34.
*1 Rotaly encoder specifications: □
*2 The product that the end of driver model designation has "E" is "positioning type".
Detail of model designation, refer to P.11.

Torque characteristics (at AC400V of power voltage <Dotted line represents the torque at 10% less supply voltage.>)

With oil seal

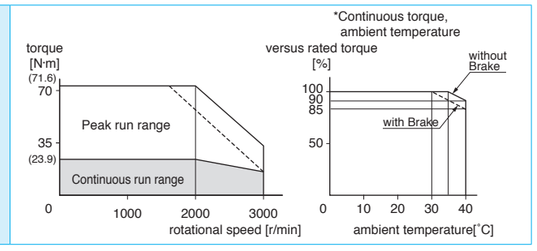

Dimensions

Mass (kg)/ Without brake: 18.6
With brake: 21.8

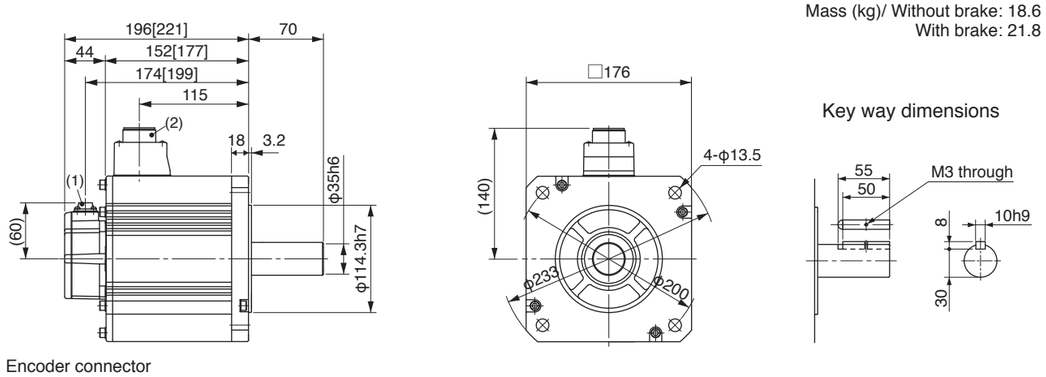

(1) Encoder connector
(2) Motor/Brake connector

* Figures in [ ] represent the dimensions of with brake.

<Cautions> Reduce the moment of inertia ratio if high speed response operation is required.
Dimensions are subject to change without notice. Contact us or a dealer for the latest information.
Read the Instruction Manual carefully and understand all precautions and remarks before using the products.

Motor Specifications 400V MGME 0.9kW [Middle inertia, Middle capacity]

Specifications

			AC400V	
Motor model *1		MGME	094G1□	094S1□
Applicable driver *2	Model No.	A5 series	MDDHT3420	
		A5E series	MDDHT3420E	
	Frame symbol		D-frame	
Power supply capacity		(kVA)	1.8	
Rated output		(W)	0.9	
Rated torque		(N·m)	8.59	
Momentary Max. peak torque		(N·m)	19.3	
Rated current		(A(rms))	3.8	
Max. current		(A(o-p))	12	
Regenerative brake frequency (times/min) Note)1	Without option		No limit Note)2	
	DV0PM20048		No limit Note)2	
Rated rotational speed		(r/min)	1000	
Max. rotational speed		(r/min)	2000	
Moment of inertia of rotor ($\times10^{-4}$kg·m^2)	Without brake		6.70	
	With brake		7.99	
Recommended moment of inertia ratio of the load and the rotor Note)3			0 times or less	
Rotary encoder specifications Note)5			20-bit Incremental	17-bit Absolute
	Resolution per single turn		1,048,576	131,072

• **Brake specifications** (For details, refer to P.105)
(This brake will be released when it is energized. Do not use this for braking the motor in motion.)

Static friction torque (N·m)	13.7 or more
Engaging time (ms)	100 or less
Releasing time (ms) Note)4	50 or less
Exciting current (DC) (A)	0.79±10%
Releasing voltage (DC) (V)	2 or more
Exciting voltage (DC) (V)	24±2.4

• **Permissible load** (For details, refer to P.104)

During assembly	Radial load P-direction (N)	980
	Thrust load A-direction (N)	588
	Thrust load B-direction (N)	686
During operation	Radial load P-direction (N)	686
	Thrust load A, B-direction (N)	196

• For details of Note 1 to Note 5, refer to P.104.
• Dimensions of Driver, refer to P.32.
*1 Rotaly encoder specifications: □
*2 The product that the end of driver model designation has "E" is "positioning type".
Detail of model designation, refer to P.11.

Torque characteristics (at AC400V of power voltage <Dotted line represents the torque at 10% less supply voltage.>)

With oil seal

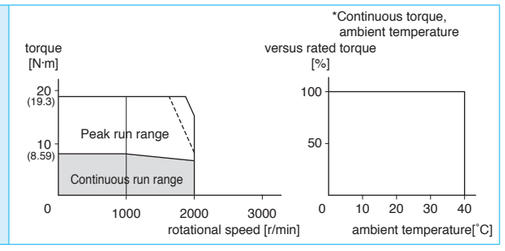

Dimensions

Mass (kg)/ Without brake: 6.7
With brake: 8.2

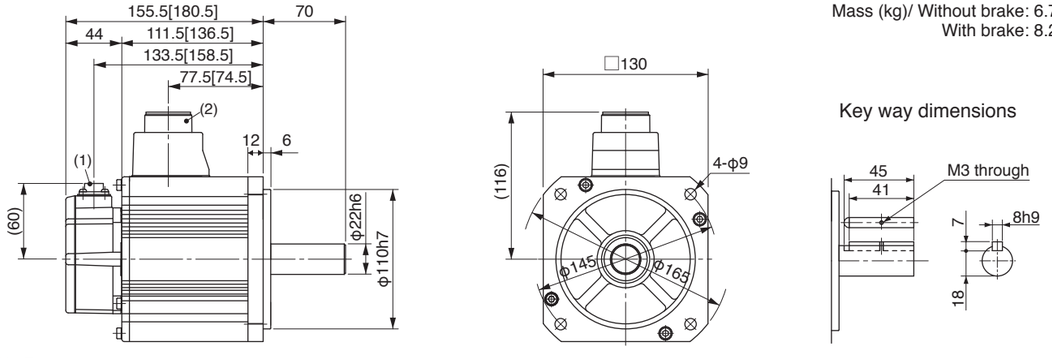

(1) Encoder connector
(2) Motor/Brake connector

* Figures in [ ] represent the dimensions of with brake.

<Cautions> Reduce the moment of inertia ratio if high speed response operation is required.
Dimensions are subject to change without notice. Contact us or a dealer for the latest information.
Read the Instruction Manual carefully and understand all precautions and remarks before using the products.

Motor Specifications 400V MGME 2.0kW [Middle inertia, Middle capacity]

Specifications

			AC400V	
Motor model *1		MGME	204G1□	204S1□
Applicable driver *2	Model No.	A5 series	MFDHT5440	
		A5E series	MFDHT5440E	
	Frame symbol		F-frame	
Power supply capacity		(kVA)	3.8	
Rated output		(W)	2.0	
Rated torque		(N·m)	19.1	
Momentary Max. peak torque		(N·m)	47.7	
Rated current		(A(rms))	8.5	
Max. current		(A(o-p))	30	
Regenerative brake frequency (times/min) Note)1	Without option		No limit Note)2	
	DV0PM20049×2		No limit Note)2	
Rated rotational speed		(r/min)	1000	
Max. rotational speed		(r/min)	2000	
Moment of inertia of rotor ($\times10^{-4}$kg·m^2)	Without brake		30.3	
	With brake		31.4	
Recommended moment of inertia ratio of the load and the rotor Note)3			0 times or less	
Rotary encoder specifications Note)5			20-bit Incremental	17-bit Absolute
	Resolution per single turn		1,048,576	131,072

• **Brake specifications** (For details, refer to P.105)
(This brake will be released when it is energized. Do not use this for braking the motor in motion.)

Static friction torque (N·m)	24.5 or more
Engaging time (ms)	80 or less
Releasing time (ms) Note)4	25 or less
Exciting current (DC) (A)	1.3±10%
Releasing voltage (DC) (V)	2 or more
Exciting voltage (DC) (V)	24±2.4

• **Permissible load** (For details, refer to P.104)

During assembly	Radial load P-direction (N)	1666
	Thrust load A-direction (N)	784
	Thrust load B-direction (N)	980
During operation	Radial load P-direction (N)	1176
	Thrust load A, B-direction (N)	490

• For details of Note 1 to Note 5, refer to P.104.
• Dimensions of Driver, refer to P.34.
*1 Rotaly encoder specifications: □
*2 The product that the end of driver model designation has "E" is "positioning type".
Detail of model designation, refer to P.11.

Torque characteristics (at AC400V of power voltage <Dotted line represents the torque at 10% less supply voltage.>)

With oil seal

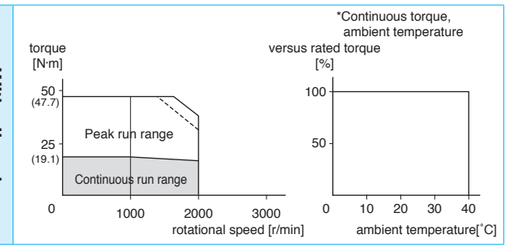

Dimensions

Mass (kg)/ Without brake: 14.0
With brake: 17.5

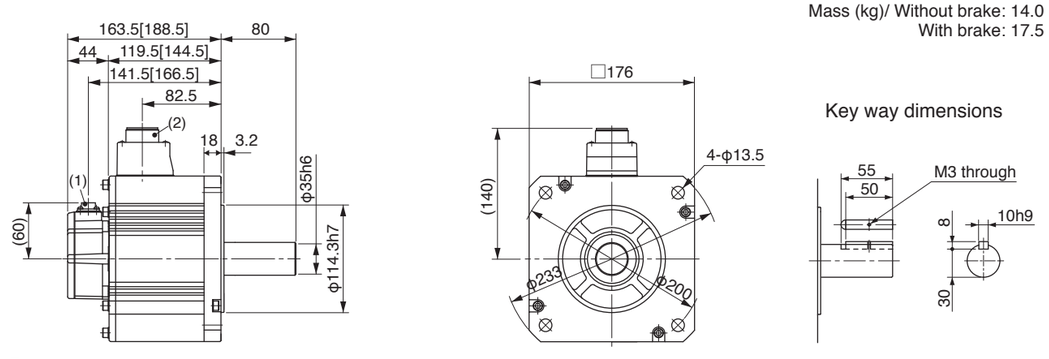

(1) Encoder connector
(2) Motor/Brake connector

* Figures in [ ] represent the dimensions of with brake.

<Cautions> Reduce the moment of inertia ratio if high speed response operation is required.
Dimensions are subject to change without notice. Contact us or a dealer for the latest information.
Read the Instruction Manual carefully and understand all precautions and remarks before using the products.

Specifications

		AC400V	
Motor model *1	MGME	304G1□	304S1□
Applicable driver *2	Model No. A5 series	MFDHTA464	
	Model No. A5E series	MFDHTA464E	
	Frame symbol	F-frame	
Power supply capacity (kVA)		4.5	
Rated output (W)		3.0	
Rated torque (N·m)		28.7	
Momentary Max. peak torque (N·m)		71.7	
Rated current (A(rms))		11.3	
Max. current (A(o-p))		40	
Regenerative brake frequency (times/min) Note)1	Without option	No limit Note)2	
	DV0PM20049×2	No limit Note)2	
Rated rotational speed (r/min)		1000	
Max. rotational speed (r/min)		2000	
Moment of inertia of rotor ($\times10^{-4}$kg·m^2)	Without brake	48.4	
	With brake	49.2	
Recommended moment of inertia ratio of the load and the rotor Note)3		0 times or less	
Rotary encoder specifications Note)5		20-bit Incremental	17-bit Absolute
	Resolution per single turn	1,048,576	131,072

• **Brake specifications** (For details, refer to P.105)
(This brake will be released when it is energized.
Do not use this for braking the motor in motion.)

Static friction torque (N·m)	58.8 or more
Engaging time (ms)	150 or less
Releasing time (ms) Note)4	50 or less
Exciting current (DC) (A)	1.4±10%
Releasing voltage (DC) (V)	2 or more
Exciting voltage (DC) (V)	24±2.4

• **Permissible load** (For details, refer to P.104)

During assembly	Radial load P-direction (N)	2058
	Thrust load A-direction (N)	980
	Thrust load B-direction (N)	1176
During operation	Radial load P-direction (N)	1470
	Thrust load A, B-direction (N)	490

• For details of Note 1 to Note 5, refer to P.104.
• Dimensions of Driver, refer to P.34.
*1 Rotaly encoder specifications: □
*2 The product that the end of driver model designation has "E" is "positioning type".
Detail of model designation, refer to P.11.

Torque characteristics (at AC400V of power voltage <Dotted line represents the torque at 10% less supply voltage.>)

With oil seal

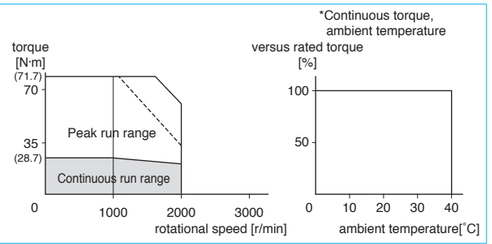

Dimensions

Mass (kg)/ Without brake: 20.0
With brake: 23.5

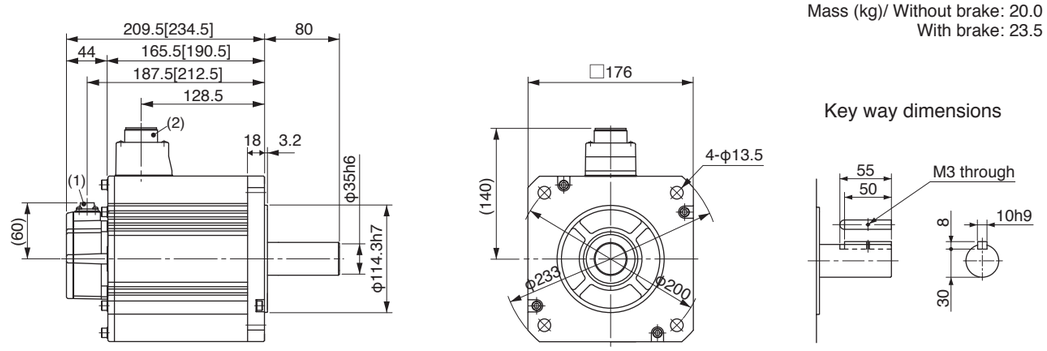

(1) Encoder connector
(2) Motor/Brake connector

* Figures in [ ] represent the dimensions of with brake.

<Cautions> Reduce the moment of inertia ratio if high speed response operation is required.
Dimensions are subject to change without notice. Contact us or a dealer for the latest information.
Read the Instruction Manual carefully and understand all precautions and remarks before using the products.

MEMO

Motor Specifications 400V MHME 0.9kW [High inertia, Middle capacity]

Specifications

			AC400V	
Motor model *1		MHME	104G1□	104S1□
Applicable driver *2	Model No.	A5 series	MDDHT2412	
		A5E series	MDDHT2412E	
	Frame symbol		D-frame	
Power supply capacity		(kVA)	1.8	
Rated output		(W)	1.0	
Rated torque		(N·m)	4.77	
Momentary Max. peak torque		(N·m)	14.3	
Rated current		(A(rms))	2.9	
Max. current		(A(o-p))	12	
Regenerative brake frequency (times/min) Note)1	Without option		83	
	DV0PM20048		No limit Note)2	
Rated rotational speed		(r/min)	2000	
Max. rotational speed		(r/min)	3000	
Moment of inertia of rotor ($\times10^{-4}$kg·m^2)	Without brake		24.7	
	With brake		26.0	
Recommended moment of inertia ratio of the load and the rotor Note)3			0 times or less	
Rotary encoder specifications Note)5			20-bit Incremental	17-bit Absolute
	Resolution per single turn		1,048,576	131,072

• **Brake specifications** (For details, refer to P.105)
(This brake will be released when it is energized.
Do not use this for braking the motor in motion.)

Static friction torque (N·m)	4.9 or more
Engaging time (ms)	80 or less
Releasing time (ms) Note)4	70 or less
Exciting current (DC) (A)	0.59±10%
Releasing voltage (DC) (V)	2 or more
Exciting voltage (DC) (V)	24±2.4

• **Permissible load** (For details, refer to P.104)

During assembly	Radial load P-direction (N)	980
	Thrust load A-direction (N)	588
	Thrust load B-direction (N)	686
During operation	Radial load P-direction (N)	490
	Thrust load A, B-direction (N)	196

• For details of Note 1 to Note 5, refer to P.104.
• Dimensions of Driver, refer to P.32.
*1 Rotaly encoder specifications: □
*2 The product that the end of driver model designation has "E" is "positioning type".
Detail of model designation, refer to P.11.

Torque characteristics (at AC400V of power voltage <Dotted line represents the torque at 10% less supply voltage.>)

With oil seal

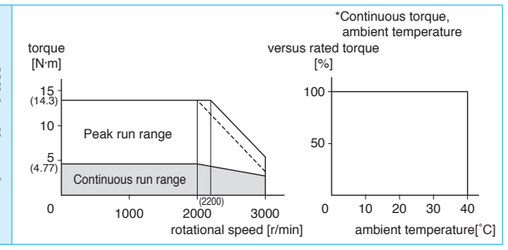

Dimensions

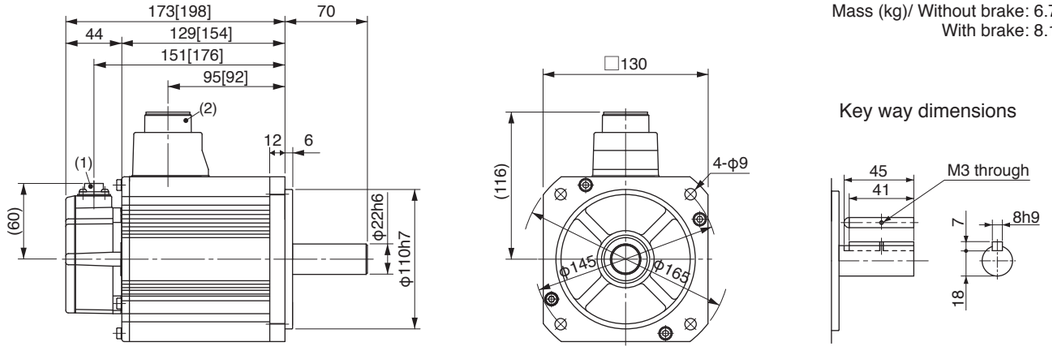

Mass (kg)/ Without brake: 6.7
With brake: 8.1

(1) Encoder connector
(2) Motor/Brake connector

* Figures in [ ] represent the dimensions of with brake.

<Cautions> Reduce the moment of inertia ratio if high speed response operation is required.
Dimensions are subject to change without notice. Contact us or a dealer for the latest information.
Read the Instruction Manual carefully and understand all precautions and remarks before using the products.

Motor Specifications 400V MHME 1.5kW [High inertia, Middle capacity]

Specifications

			AC400V	
Motor model *1		MHME	154G1□	154S1□
Applicable driver *2	Model No.	A5 series	MDDHT3420	
		A5E series	MDDHT3420E	
	Frame symbol		D-frame	
Power supply capacity		(kVA)	2.3	
Rated output		(W)	1.5	
Rated torque		(N·m)	7.16	
Momentary Max. peak torque		(N·m)	21.5	
Rated current		(A(rms))	4.7	
Max. current		(A(o-p))	20	
Regenerative brake frequency (times/min) Note)1	Without option		22	
	DV0PM20048		130	
Rated rotational speed		(r/min)	2000	
Max. rotational speed		(r/min)	3000	
Moment of inertia of rotor ($\times10^{-4}$kg·m^2)	Without brake		37.1	
	With brake		38.4	
Recommended moment of inertia ratio of the load and the rotor Note)3			0 times or less	
Rotary encoder specifications Note)5			20-bit Incremental	17-bit Absolute
	Resolution per single turn		1,048,576	131,072

• **Brake specifications** (For details, refer to P.105)
(This brake will be released when it is energized.
Do not use this for braking the motor in motion.)

Static friction torque (N·m)	13.7 or more
Engaging time (ms)	100 or less
Releasing time (ms) Note)4	50 or less
Exciting current (DC) (A)	0.79±10%
Releasing voltage (DC) (V)	2 or more
Exciting voltage (DC) (V)	24±2.4

• **Permissible load** (For details, refer to P.104)

During assembly	Radial load P-direction (N)	980
	Thrust load A-direction (N)	588
	Thrust load B-direction (N)	686
During operation	Radial load P-direction (N)	490
	Thrust load A, B-direction (N)	196

• For details of Note 1 to Note 5, refer to P.104.
• Dimensions of Driver, refer to P.32.
*1 Rotaly encoder specifications: □
*2 The product that the end of driver model designation has "E" is "positioning type".
Detail of model designation, refer to P.11.

Torque characteristics (at AC400V of power voltage <Dotted line represents the torque at 10% less supply voltage.>)

With oil seal

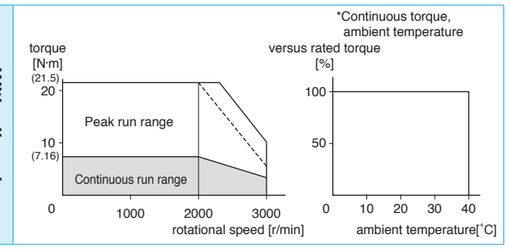

Dimensions

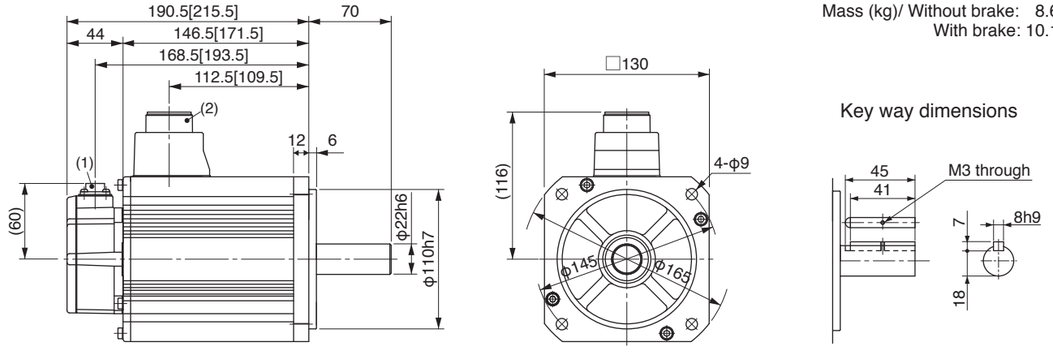

Mass (kg)/ Without brake: 8.6
With brake: 10.1

(1) Encoder connector
(2) Motor/Brake connector

* Figures in [ ] represent the dimensions of with brake.

<Cautions> Reduce the moment of inertia ratio if high speed response operation is required.
Dimensions are subject to change without notice. Contact us or a dealer for the latest information.
Read the Instruction Manual carefully and understand all precautions and remarks before using the products.

Motor Specifications 400V MHME 2.0kW [High inertia, Middle capacity]

Specifications

			AC400V	
Motor model *1		MHME	204G1□	204S1□
Applicable driver *2	Model No.	A5 series	MEDHT4430	
		A5E series	MEDHT4430E	
	Frame symbol		E-frame	
Power supply capacity		(kVA)	3.3	
Rated output		(W)	2.0	
Rated torque		(N·m)	9.55	
Momentary Max. peak torque		(N·m)	28.6	
Rated current		(A(rms))	5.5	
Max. current		(A(o-p))	24	
Regenerative brake frequency (times/min) Note)1	Without option		45	
	DV0PM20048		142	
Rated rotational speed		(r/min)	2000	
Max. rotational speed		(r/min)	3000	
Moment of inertia of rotor ($\times10^{-4}$kg·m^2)	Without brake		57.8	
	With brake		59.6	
Recommended moment of inertia ratio of the load and the rotor Note)3			0 times or less	
Rotary encoder specifications Note)5			20-bit Incremental	17-bit Absolute
	Resolution per single turn		1,048,576	131,072

• **Brake specifications** (For details, refer to P.105)

(This brake will be released when it is energized. Do not use this for braking the motor in motion.)

Static friction torque (N·m)	24.5 or more
Engaging time (ms)	80 or less
Releasing time (ms) Note)4	25 or less
Exciting current (DC) (A)	1.3±10%
Releasing voltage (DC) (V)	2 or more
Exciting voltage (DC) (V)	24±2.4

• **Permissible load** (For details, refer to P.104)

During assembly	Radial load P-direction (N)	1666
	Thrust load A-direction (N)	784
	Thrust load B-direction (N)	980
During operation	Radial load P-direction (N)	784
	Thrust load A, B-direction (N)	343

• For details of Note 1 to Note 5, refer to P.104.
• Dimensions of Driver, refer to P.33.
*1 Rotaly encoder specifications: □
*2 The product that the end of driver model designation has "E" is "positioning type".
Detail of model designation, refer to P.11.

Torque characteristics (at AC400V of power voltage <Dotted line represents the torque at 10% less supply voltage.>)

With oil seal

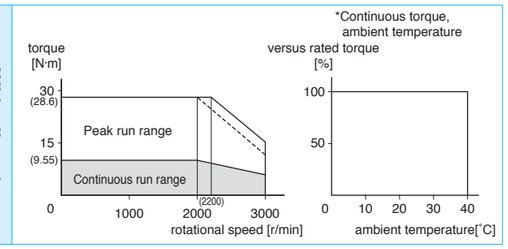

Dimensions

Mass (kg)/ Without brake: 12.2
With brake: 15.5

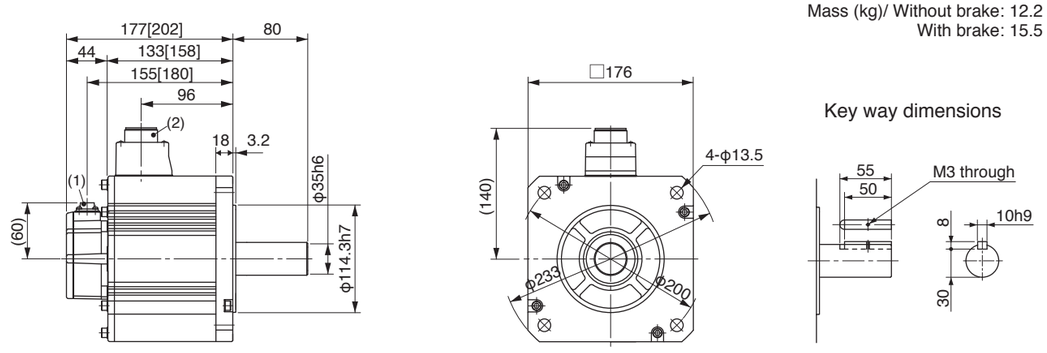

(1) Encoder connector
(2) Motor/Brake connector

* Figures in [ ] represent the dimensions of with brake.

<Cautions> Reduce the moment of inertia ratio if high speed response operation is required.
Dimensions are subject to change without notice. Contact us or a dealer for the latest information.
Read the Instruction Manual carefully and understand all precautions and remarks before using the products.

Motor Specifications 400V MHME 3.0kW [High inertia, Middle capacity]

Specifications

			AC400V	
Motor model *1		MHME	304G1□	304S1□
Applicable driver *2	Model No.	A5 series	MFDHT5440	
		A5E series	MFDHT5440E	
	Frame symbol		F-frame	
Power supply capacity		(kVA)	4.5	
Rated output		(W)	3.0	
Rated torque		(N·m)	14.3	
Momentary Max. peak torque		(N·m)	43.0	
Rated current		(A(rms))	8.0	
Max. current		(A(o-p))	34	
Regenerative brake frequency (times/min) Note)1	Without option		19	
	DV0PM20049×2		142	
Rated rotational speed		(r/min)	2000	
Max. rotational speed		(r/min)	3000	
Moment of inertia of rotor ($\times10^{-4}$kg·m^2)	Without brake		90.5	
	With brake		92.1	
Recommended moment of inertia ratio of the load and the rotor Note)3			0 times or less	
Rotary encoder specifications Note)5			20-bit Incremental	17-bit Absolute
	Resolution per single turn		1,048,576	131,072

• **Brake specifications** (For details, refer to P.105)

(This brake will be released when it is energized. Do not use this for braking the motor in motion.)

Static friction torque (N·m)	24.5 or more
Engaging time (ms)	80 or less
Releasing time (ms) Note)4	25 or less
Exciting current (DC) (A)	1.3±10%
Releasing voltage (DC) (V)	2 or more
Exciting voltage (DC) (V)	24±2.4

• **Permissible load** (For details, refer to P.104)

During assembly	Radial load P-direction (N)	1666
	Thrust load A-direction (N)	784
	Thrust load B-direction (N)	980
During operation	Radial load P-direction (N)	784
	Thrust load A, B-direction (N)	343

• For details of Note 1 to Note 5, refer to P.104.
• Dimensions of Driver, refer to P.34.
*1 Rotaly encoder specifications: □
*2 The product that the end of driver model designation has "E" is "positioning type".
Detail of model designation, refer to P.11.

Torque characteristics (at AC400V of power voltage <Dotted line represents the torque at 10% less supply voltage.>)

With oil seal

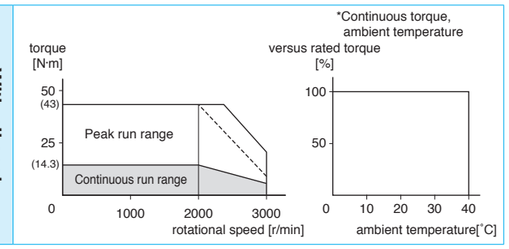

Dimensions

Mass (kg)/ Without brake: 16.0
With brake: 19.2

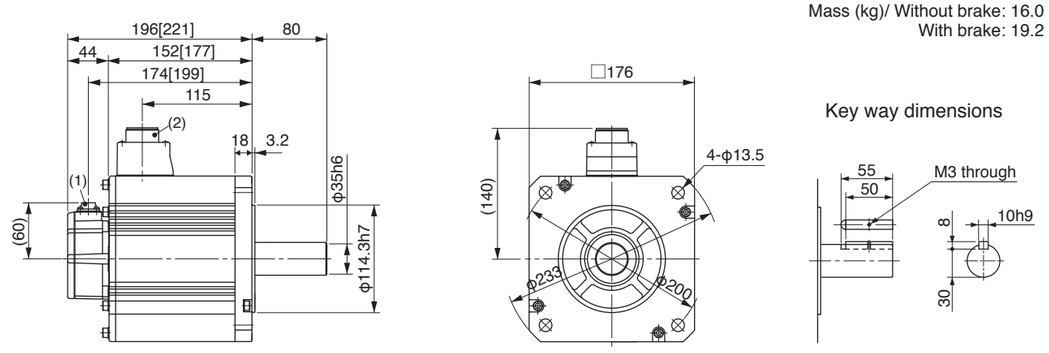

(1) Encoder connector
(2) Motor/Brake connector

* Figures in [ ] represent the dimensions of with brake.

<Cautions> Reduce the moment of inertia ratio if high speed response operation is required.
Dimensions are subject to change without notice. Contact us or a dealer for the latest information.
Read the Instruction Manual carefully and understand all precautions and remarks before using the products.

Specifications

			AC400V	
Motor model *1		MHME	404G1□	404S1□
Applicable driver *2	Model No.	A5 series	MFDHTA464	
		A5E series	MFDHTA464E	
	Frame symbol		F-frame	
Power supply capacity		(kVA)	6.8	
Rated output		(W)	4.0	
Rated torque		(N·m)	19.1	
Momentary Max. peak torque		(N·m)	57.3	
Rated current		(A(rms))	10.5	
Max. current		(A(o-p))	45	
Regenerative brake frequency (times/min) Note)1	Without option		17	
	DV0PM20049×2		125	
Rated rotational speed		(r/min)	2000	
Max. rotational speed		(r/min)	3000	
Moment of inertia of rotor ($\times10^{-4}$kg·m^2)	Without brake		112	
	With brake		114	
Recommended moment of inertia ratio of the load and the rotor Note)3			0 times or less	
Rotary encoder specifications Note)5			20-bit Incremental	17-bit Absolute
	Resolution per single turn		1,048,576	131,072

• **Brake specifications** (For details, refer to P.105)
(This brake will be released when it is energized. Do not use this for braking the motor in motion.)

Static friction torque (N·m)	24.5 or more
Engaging time (ms)	80 or less
Releasing time (ms) Note)4	25 or less
Exciting current (DC) (A)	1.3±10%
Releasing voltage (DC) (V)	2 or more
Exciting voltage (DC) (V)	24±2.4

• **Permissible load** (For details, refer to P.104)

During assembly	Radial load P-direction (N)	1666
	Thrust load A-direction (N)	784
	Thrust load B-direction (N)	980
During operation	Radial load P-direction (N)	784
	Thrust load A, B-direction (N)	343

• For details of Note 1 to Note 5, refer to P.104.
• Dimensions of Driver, refer to P.34.
*1 Rotaly encoder specifications: □
*2 The product that the end of driver model designation has "E" is "positioning type".
Detail of model designation, refer to P.11.

Torque characteristics (at AC400V of power voltage <Dotted line represents the torque at 10% less supply voltage.>)

With oil seal

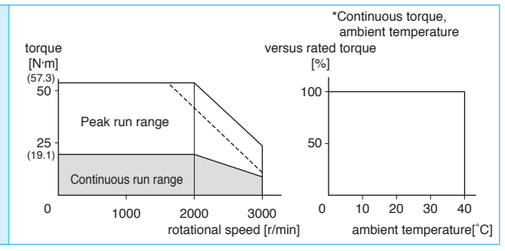

Dimensions

Mass (kg)/ Without brake: 18.6
With brake: 21.8

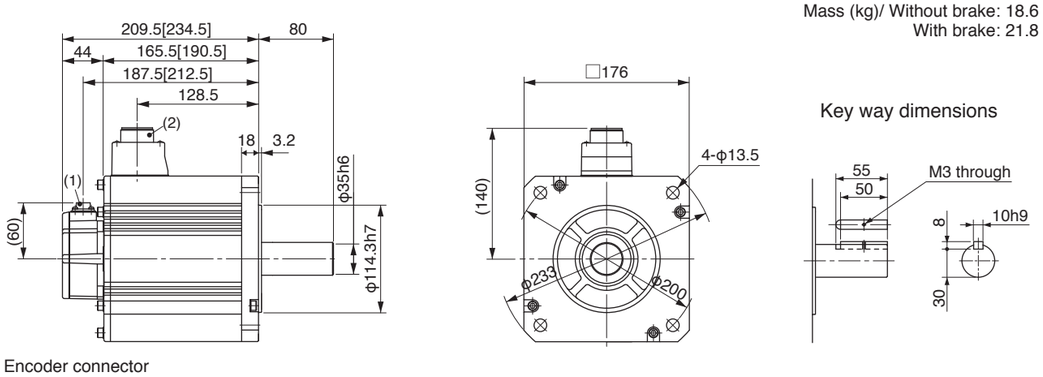

(1) Encoder connector
(2) Motor/Brake connector

* Figures in [ ] represent the dimensions of with brake.

<Cautions> Reduce the moment of inertia ratio if high speed response operation is required.
Dimensions are subject to change without notice. Contact us or a dealer for the latest information.
Read the Instruction Manual carefully and understand all precautions and remarks before using the products.

Specifications

			AC400V	
Motor model *1		MHME	504G1□	504S1□
Applicable driver *2	Model No.	A5 series	MFDHTA464	
		A5E series	MFDHTA464E	
	Frame symbol		F-frame	
Power supply capacity		(kVA)	7.5	
Rated output		(W)	5.0	
Rated torque		(N·m)	23.9	
Momentary Max. peak torque		(N·m)	71.6	
Rated current		(A(rms))	13.0	
Max. current		(A(o-p))	55	
Regenerative brake frequency (times/min) Note)1	Without option		10	
	DV0PM20049×2		76	
Rated rotational speed		(r/min)	2000	
Max. rotational speed		(r/min)	3000	
Moment of inertia of rotor ($\times10^{-4}$kg·m^2)	Without brake		162	
	With brake		164	
Recommended moment of inertia ratio of the load and the rotor Note)3			0 times or less	
Rotary encoder specifications Note)5			20-bit Incremental	17-bit Absolute
	Resolution per single turn		1,048,576	131,072

• **Brake specifications** (For details, refer to P.105)
(This brake will be released when it is energized. Do not use this for braking the motor in motion.)

Static friction torque (N·m)	24.5 or more
Engaging time (ms)	80 or less
Releasing time (ms) Note)4	25 or less
Exciting current (DC) (A)	1.3±10%
Releasing voltage (DC) (V)	2 or more
Exciting voltage (DC) (V)	24±2.4

• **Permissible load** (For details, refer to P.104)

During assembly	Radial load P-direction (N)	1666
	Thrust load A-direction (N)	784
	Thrust load B-direction (N)	980
During operation	Radial load P-direction (N)	784
	Thrust load A, B-direction (N)	343

• For details of Note 1 to Note 5, refer to P.104.
• Dimensions of Driver, refer to P.34.
*1 Rotaly encoder specifications: □
*2 The product that the end of driver model designation has "E" is "positioning type".
Detail of model designation, refer to P.11.

Torque characteristics (at AC400V of power voltage <Dotted line represents the torque at 10% less supply voltage.>)

With oil seal

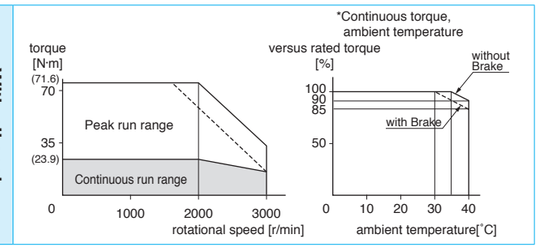

Dimensions

Mass (kg)/ Without brake: 23.0
With brake: 26.2

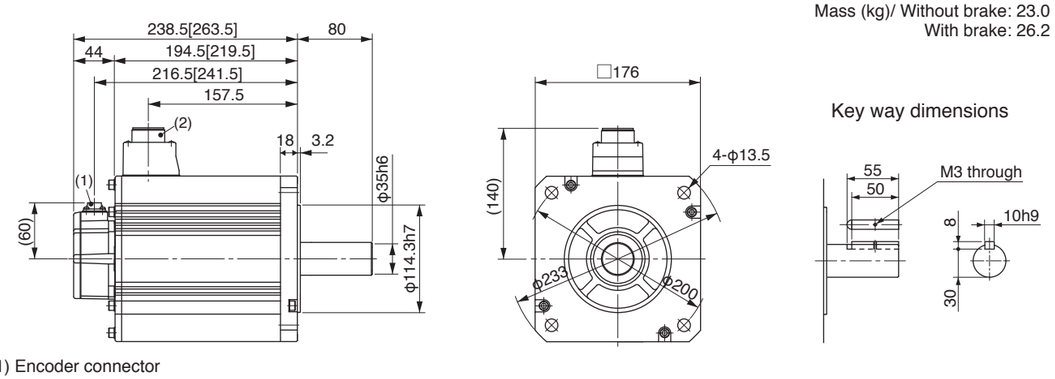

(1) Encoder connector
(2) Motor/Brake connector

* Figures in [ ] represent the dimensions of with brake.

<Cautions> Reduce the moment of inertia ratio if high speed response operation is required.
Dimensions are subject to change without notice. Contact us or a dealer for the latest information.
Read the Instruction Manual carefully and understand all precautions and remarks before using the products.

「モータ仕様」ページの注釈について

Note) 1. **[At AC100V of power voltage]**
Regenerative brake frequency represents the frequency of the motor's stops from the rated speed with deceleration without load.
- If the load is connected, frequency will be defines as 1/(m+1), where m=load moment of inertia/rotor moment of inertia.
- When the motor speed exceeds the rated speed, regenerative brake frequency is in inverse proportion to the square of (running speed/rated speed).
- Power supply voltage is AC115V (at 100V of the main voltage).
  If the supply voltage fluctuates, frequency is in inverse proportion to the square of (Running supply voltage/115) relative to the value in the table.
- When regeneration occurs continuously such cases as running speed frequently changes or vertical feeding, consult us or a dealer.

[At AC200V of power voltage]
Regenerative brake frequency represents the frequency of the motor's stops from the rated speed with deceleration without load.
- If the load is connected, frequency will be defines as 1/(m+1), where m=load moment of inertia/rotor moment of inertia.
- When the motor speed exceeds the rated speed, regenerative brake frequency is in inverse proportion to the square of (running speed/rated speed).
- Power supply voltage is AC230V (at 200V of the main voltage).
  If the supply voltage fluctuates, frequency is in inverse proportion to the square of (Running supply voltage/230) relative to the value in the table.
- When regeneration occurs continuously such cases as running speed frequently changes or vertical feeding, consult us or a dealer.

[At AC400V of power voltage]
Regenerative brake frequency represents the frequency of the motor's stops from the rated speed with deceleration without load.
- If the load is connected, frequency will be defines as 1/(m+1), where m=load moment of inertia/rotor moment of inertia.
- When the motor speed exceeds the rated speed, regenerative brake frequency is in inverse proportion to the square of (running speed/rated speed).
- Power supply voltage is AC460V (at 400V of the main voltage).
  If the supply voltage fluctuates, frequency is in inverse proportion to the square of (Running supply voltage/460) relative to the value in the table.
- When regeneration occurs continuously such cases as running speed frequently changes or vertical feeding, consult us or a dealer.

Note) 2. If the effective torque is within the rated torque, there is no limit in generative brake.
Note) 3. Consult us or a dealer if the load moment of inertia exceeds the specified value.
Note) 4. Releasing time values represent the ones with DC-cutoff using a varistor.
Note) 5. 17 ビット アブソリュートエンコーダは、17 ビット インクリメンタルエンコーダとしても使用可能です。

Permissible Load at Output Shaft

The radial load is defined as a load applied to the output shaft in the right-angle direction. This load is generated when the gear head is coupled to the machine using a chain, belt, etc., but not when the gear head is directly connected to the coupling. As shown in the right figure, the permissible value is determined based on the load applied to the L/2 position of the output shaft. The thrust load is defined as a load applied to the output shaft in the axial direction.

Because the radial load and thrust load significantly affect the life of the bearing, take care not to allow the load during operation to exceed the permissible radial load and thrust load shown in the table below.

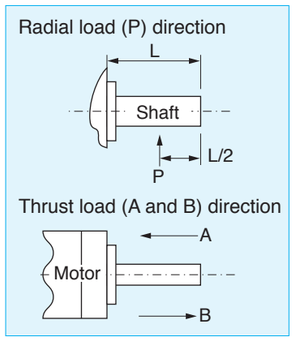

Built-in Holding Brake

In the applications where the motor drives the vertical axis, this brake would be used to hold and prevent the work (moving load) from falling by gravity while the power to the servo is shut off.

Use this built-in brake for "Holding" purpose only, that is to hold the stalling status. Never use this for "Brake" purpose to stop the load in motion.

- **Output Timing of BRK-OFF Signal**
  - For the brake release timing at power-on, or braking timing at Servo-OFF/Servo-Alarm while the motor is in motion, refer to the Operating Instructions (Overall).
  - With the parameter, Pr4.38 (Setup of mechanical brake action while the motor is in motion), you can set up a time between when the motor enters to a free-run from energized status and when BRK-OFF signal turns off (brake will be engaged), when the Servo-OFF or alarm occurs while the motor is in motion. その詳細については、弊社ホームページから取扱説明書をダウンロードして参照してください。

<Note>
1. The lining sound of the brake (chattering and etc.) might be generated while running the motor with built-in brake, however this does not affect any functionality.
2. Magnetic flux might be generated through the motor shaft while the brake coil is energized (brake is open). Pay an extra attention when magnetic sensors are used nearby the motor.

- **Specifications of Built-in Holding Brake**

Motor series	Motor output	Static friction torque N·m	Rotor inertia x 10^{-4} kg·m^2	Engaging time ms	Releasing time ms	Exciting current DC A (at cool-off)	Releasing voltage	Permissible work (J) per one braking	Permissible total work x 10^3J	Permissible angular acceleration rad/s^2
MSMD	50W, 100W	0.29 or more	0.002	35 or less	20 or less	0.3	DC1V or more	39.2	4.9	30000
	200W, 400W	1.27 or more	0.018	50 or less	15 or less	0.36		137	44.1	
	750W	2.45 or more	0.075	70 or less	20 or less	0.42		196	147	
MSME	50W, 100W	0.29 or more	0.002	35 or less	20 or less	0.3	DC1V or more	39.2	4.9	30000
	200W, 400W	1.27 or more	0.018	50 or less	15 or less	0.36		137	44.1	
	750W	2.45 or more	0.075	70 or less	20 or less	0.42		196	147	
	1.0kW, 1.5kW, 2.0kW	7.8 or more	0.33	50 or less	15 or less (100)	0.81	DC2V or more	392	490	10000
	3.0kW	11.8 or more		80 or less						
	4.0kW, 5.0kW	16.1 or more	1.35	110 or less	50 or less (130)	0.9		1470	2200	
MDME	1.0kW	4.9 or more	1.35	80 or less	70 or less (200)	0.59	DC2V or more	588	780	10000
	1.5kW, 2.0kW	13.7 or more		100 or less	50 or less (130)	0.79		1176	1500	
	3.0kW	16.2 or more		110 or less		0.9		1470	2200	
	4.0kW, 5.0kW	24.5 or more	4.7	80 or less	25 or less (200)	1.3		1372	2900	5440
MGME	900W	13.7 or more	1.35	100 or less	50 or less (130)	0.79	DC2V or more	1176	1500	10000
	2.0kW	24.5 or more	4.7	80 or less	25 or less (200)	1.3		1372	2900	5440
	3.0kW	58.8 or more		150 or less	50 or less (130)	1.4				
MHMD	200W, 400W	1.27 or more	0.018	50 or less	15 or less	0.36	DC1V or more	137	44.1	30000
	750W	2.45 or more	0.075	70 or less	20 or less	0.42		196	147	
MHME	1.0kW	4.9 or more	1.35	80 or less	70 or less (200)	0.59	DC2V or more	588	780	10000
	1.5kW	13.7 or more		100 or less	50 or less (130)	0.79		1176	1500	
	2.0kW to 5.0kW	24.5 or more	4.7	or less以下	25 or less (200)	1.3		1372	2900	5440

- Excitation voltage is DC24V±10% (Large type motor) and DC24V±5% (Small type motor).
- Releasing time values represent the ones with DC-cutoff using a varistor.
  Values in ( ) represent those measured by using a diode (V03C by Hitachi, Ltd.)
- Above values (except static friction torque, releasing voltage and excitation current) represent typical values.
- Backlash of the built-in holding brake is kept ±1˚or smaller at ex-factory point.
- Service life of the number of acceleration/deceleration with the above permissible angular acceleration is more than 10 million times. (Life end is defined as when the brake backlash drastically changes.)

EC Directives/Conformity to UL Standards

EC Directives

The EC Directives apply to all such electronic products as those having specific functions and have been exported to EU and directly sold to general consumers. Those products are required to conform to the EU unified standards and to furnish the CE marking on the products.
However, our AC servos meet the relevant EC Directives for Low Voltage Equipment so that the machine or equipment comprising our AC servos can meet EC Directives.

EMC Directives

MINAS Servo System conforms to relevant standard under EMC Directives setting up certain model (condition) with certain locating distance and wiring of the servo motor and the driver. And actual working condition often differs from this model condition especially in wiring and grounding. Therefore, in order for the machine to conform to the EMC Directives, especially for noise emission and noise terminal voltage, it is necessary to examine the machine incorporating our servos.

Conformity to UL Standards

Observe the following conditions of (1) and (2) to make the system conform to UL508C (E164620).

(1) Use the driver in an environment of Pollution Degree 2 or 1 prescribed in IEC60664-1.
(e.g. Install in the control box with IP54 enclosure.)

(2) Make sure to install a circuit breaker or fuse which are UL recognized (Listed Ⓤ marked) between the power supply and the noise filter.
For rated current of circuit breaker and fuse, refer to P.14 “Driver and List of Applicable Peripheral Equipments”.
Use a copper cable with temperature rating of 75˚C or higher.

(3) Over-load protection level
Over-load protective function will be activated when the effective current exceeds 115% or more than the rated current based on the time characteristics (see the next page). Confirm that the effective current of the driver does not exceed the rated current.
Set up the peak permissible current with Pr0.13 (Setup of 1st torque limit) and Pr5.22 (Setup 2nd torque limit).

Overload protection time characteristics

・Motor type: M□ME

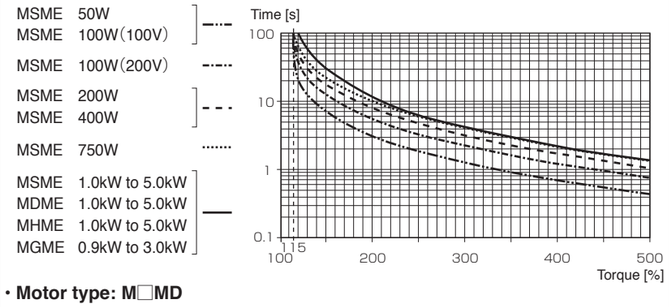

・Motor type: M□MD

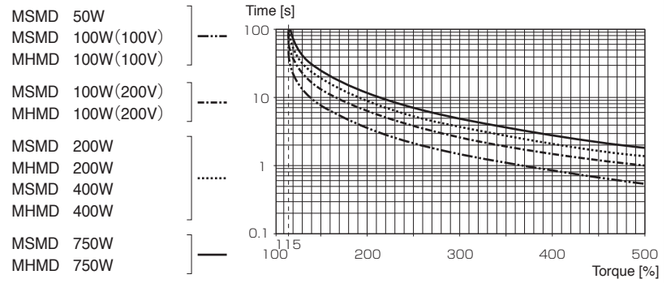

Conformed Standards

For details, refer to P.9.

Composition of Peripheral Equipments

Installation Environment

Use the servo driver in the environment of Pollution Degree 1 or 2 prescribed in IEC-60664-1 (e.g. Install the driver in control panel with IP54 protection structure.)

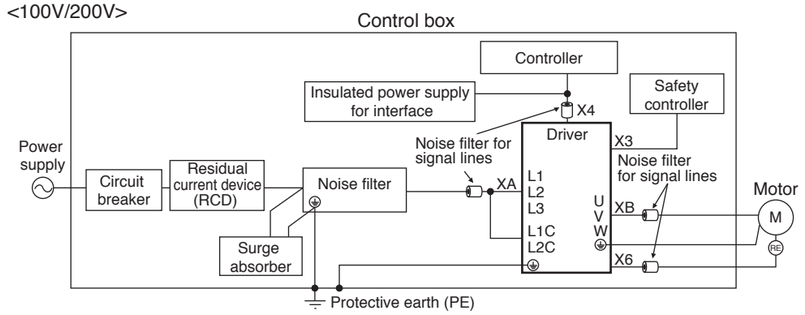

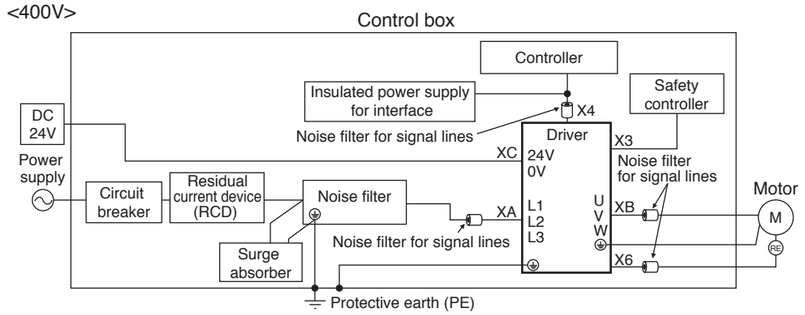

<Caution>

Use options correctly after reading Operating Instructions of the options to better understand the precautions.
Take care not to apply excessive stress to each optional part.

Power Supply

100V type : (A to C-frame)	Single phase, 100V	+ 10% − 15%	to	120V	+ 10% − 15%	50/60Hz
200V type : (A to D-frame)	Single/3-phase, 200V	+ 10% − 15%	to	240V	+ 10% − 15%	50/60Hz
200V type : (E, F-frame)	3-phase, 200V	+ 10% − 15%	to	230V	+ 10% − 15%	50/60Hz
400 V type (Main power supply): (D to F-frame)	3-phase, 380V	+ 10% − 15%	to	480V	+ 10% − 15%	50/60Hz

400 V type (Control power supply): DC 24V ±15%
(D to F-frame)

(1) This product is designed to be used in over-voltage category (installation category) III of EN 61800-5-1:2007.
(2) Use an insulated power supply of DC12 to 24V which has CE marking or complies with EN60950.

Circuit Breaker

Install a circuit breaker which complies with IEC Standards and UL recognized (Listed and marked) between power supply and noise filter.
The short-circuit protection circuit on the product is not for protection of branch circuit.
The branch circuit should be protected in accordance with NEC and the applicable local regulations in your area.

Noise Filter

When you install one noise filter at the power supply for multi-axes application, contact to a manufacture of the noise filter. If noise margin is required, connect 2 filters in series to emphasize effectiveness.

• Options

Option part No.	Voltage specifications for driver	Manufacturer's part No.	Applicable driver (frame)	Manufacturer
DV0P4170	Single phase 100V, 200V	SUP-EK5-ER-6	A and B-frame	Okaya Electric Ind.

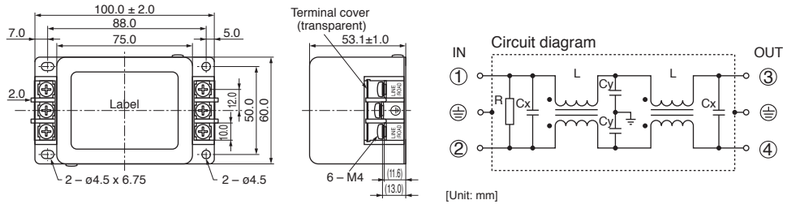

Option part No.	Voltage specifications for driver	Manufacturer's part No.	Applicable driver (frame)	Manufacturer
DV0PM20042	3-phase 200V	3SUP-HU10-ER-6	A and B-frame	Okaya Electric Ind.
	Single phase 100V, 200V 3-phase 200V		C-frame	
DV0P4220	Single/3-phase 200V	3SUP-HU30-ER-6	D-frame	
DV0PM20043	3-phase 200V	3SUP-HU50-ER-6	E-frame	

[DV0PM20042, DV0P4220]

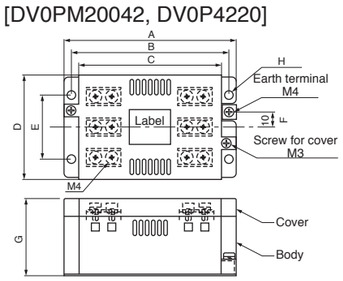

[DV0PM20043]

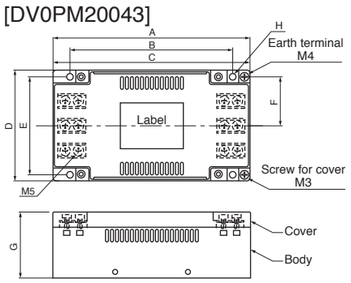

Circuit diagram

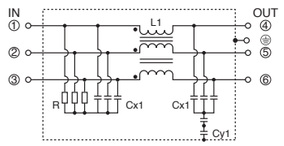

[Size] [Unit: mm]

	A	B	C	D	E	F	G	H
DV0PM20042	115	105	95	70	43	10	52	5.5
DV0P4220	145	135	125	70	50	10	52	5.5
DV0PM20043	165	136	165	90	80	40	54	5.5

Option part No.	Voltage specifications for driver	Manufacturer's part No.	Applicable driver (frame)	Manufacturer
DV0P3410	3-phase 200V	3SUP-HL50-ER-6B	F-frame	Okaya Electric Ind.

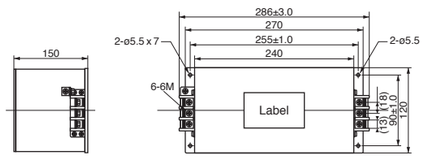

Circuit diagram

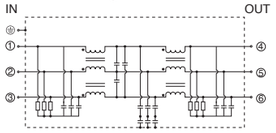

• Recommended components

part No.	Voltage specifications for driver	Current rating (A)	Manufacturer
RTHN-5010	Single phase 100V, 200V 3-phase 200V	10	TDK-Lambda Corp.
RTHN-5020		30	
RTHN-5030		50	
FN258L-16-07	3-phase 400V	16	SCHAFFNER
FN258L-30-07		30	

<Remarks>
- Select a noise filter of capacity that exceeds the capacity of the power source (also check for load condition).
- For detailed specification of the filter, contact the manufacturer.

Surge Absorber

Provide a surge absorber for the primary side of noise filter.

Option part No.	Voltage specifications for driver	Manufacturer's part No.	Manufacturer
DV0P1450	3-phase 200V	RAV-781BXZ-4	Okaya Electric Ind.
DV0PM20050	3-phase 400V	RAV-801BXZ-4	

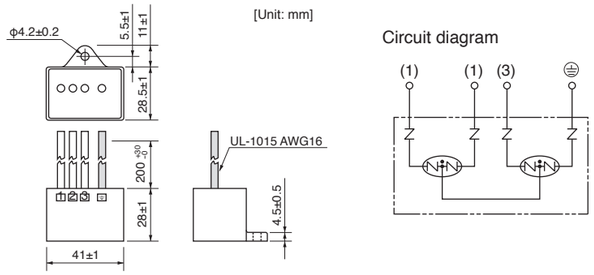

Option part No.	Voltage specifications for driver	Manufacturer's part No.	Manufacturer
DV0P4190	Single phase 100V, 200V	RAV-781BWZ-4	Okaya Electric Ind.

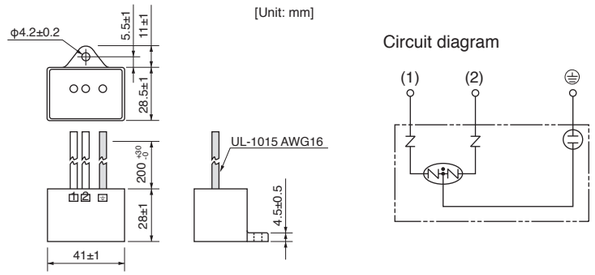

Noise Filter for Signal Lines

Install noise filters for signal lines to all cables (power cable, motor cable, encoder cable and interface cable)

Option part No.	Manufacturer's part No.	Number	Manufacturer
DV0P1460	ZCAT3035-1330	4	TDK Corp.

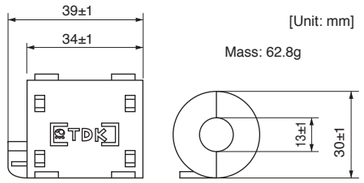

<Caution>
Fix the signal line noise filter in place to eliminate excessive stress to the cables.

Residual current device

Install a type B Residual current device (RCD) at primary side of the power supply.

Grounding

(1) Connect the protective earth terminal (⏚) of the driver and the protective earth terminal (PE) of the control box without fail to prevent electrical shocks.

(2) Do not make a joint connection to the protective earth terminals (⏚). 2 terminals are provided for protective earth.

<Note>
For driver and applicable peripheral equipments, refer to P.14 "Driver and List of Applicable Peripheral Equipments".

Cable part No. designation

Encoder cable

1	2	3	4	5	6	7	8	9	10	11	12
M	F	E	C	A	0	0	5	0	M	J	D

Type classification

MFECA	Encoder cable

Cable end (Driver side)

D	Molex Inc. connector (Incremental)
E	Molex Inc. connector (Absolute)
M	Molex Inc. connector (MSMD, MHMD)

Cable end (Encoder side)

J	Japan Aviation Electronics Industry, Ltd. connector
T	Japan Aviation Electronics Industry, Ltd. plug connector
A	Tyco Electronics, AMP connector

Cable type

E	PVC cable with shield by Oki Electric Cable Co., 0.20mm² × 8P, 3P
M	Hitachi Cable, Ltd.

Cable length

0030	3m
0050	5m
0100	10m
0200	20m

Motor cable, Brake cable

1	2	3	4	5	6	7	8	9	10	11	12
M	F	M	C	A	0	0	5	2	N	J	D

Type classification

A	Standard
B	Special
⋮	Design order

AC servo motor cable

Cable length

003	3m
005	5m
010	10m
020	20m

Cable end at driver side

D	Phoenix contact Clamp terminal
T	Clamp terminal

Cable end at motor side

C	S type cannon plug
J	Japan Aviation Electronics Industry, Ltd. connector
E	Tyco Electronics, AMP connector

Cable type

E	ROBOTOP 4-wire by Daiden Co., Ltd.
F	ROBOTOP 6-wire by Daiden Co., Ltd.
N	4-wire by Hitachi Cable, Ltd.
P	2-wire by Hitachi Cable, Ltd.

Cross section of cable core

0	0.75mm²
1	1.25mm²
2	2.0mm²
3	3.5mm²

Specifications of Motor connector

- **When the motors of <MSMD, MHMD> are used, they are connected as shown below.**
  Connector: Made by Japan Aviation Electronics Industry, Ltd. (The figures below show connectors for the motor.)

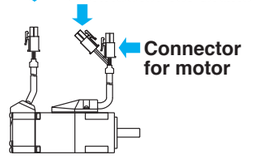

<Connector for encoder>

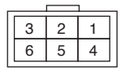

172168-1

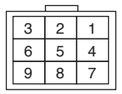

172169-1

20-bit Incremental

PIN No.	Application
1	NC
2	PS
3	PS
4	E5V
5	E0V
6	FG(SHIELD)

17-bit Absolute

PIN No.	Application
1	BAT+
2	BAT–
3	FG(SHIELD)
4	PS
5	PS
6	NC
7	E5V
8	E0V
9	NC

<Connector for motor>

172167-1

PIN No.	Application
1	U-phase
2	V-phase
3	W-phase
4	Ground

<Connector for brake>

172165-1

PIN No.	Application
1	Brake
2	Brake

- **When the motors of <MSME (50 W to 750 W)> are used, they are connected as shown below.**
  Connector: Made by Japan Aviation Electronics Industry, Ltd. (The figures below show connectors for the motor.)

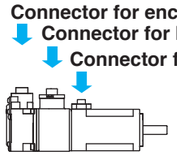

<Connector for encoder>

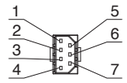

JN6CR07PM2

20-bit Incremental

PIN No.	Application
1	FG(SHIELD)
2	—
3	E0V
4	PS
5	—
6	E5V
7	PS

17-bit Absolute

PIN No.	Application
1	FG(SHIELD)
2	BAT–
3	E0V
4	PS
5	BAT+
6	E5V
7	PS

Tightening torque of the screw (M2) 0.19 to 0.21 N·m

<Connector for motor>

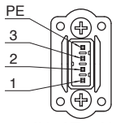

JN8AT04NJ1

PIN No.	Application
1	U-phase
2	V-phase
3	W-phase
PE	Ground

Tightening torque of the screw (M2) 0.085 to 0.095 N·m (screwed to plastic)

<Connector for brake>

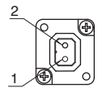

JN4AT02PJM-R

PIN No.	Application
1	Brake
2	Brake

* Electromagnetic brake is a nonpolar device.

Tightening torque of the screw (M2) 0.19 to 0.21 N·m

* Be sure to use only the screw supplied with the connector, to avoid damage.

- **When the motors of <MSME (1.0 kW to 5.0 kW), MDME, MGME, MHME> are used, they are connected as shown below.**
  Connector: Made by Japan Aviation Electronics Industry, Ltd. (The figures below show connectors for the motor.)

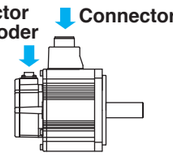

<Connector for encoder>

JN2AS10ML3-R

20-bit Incremental

PIN No.	Application
1	E0V
2	NC
3	PS
4	E5V
5	NC
6	NC
7	PS
8	NC
9	FG(SHIELD)
10	NC

17-bit Absolute

PIN No.	Application
1	E0V
2	NC
3	PS
4	E5V
5	BAT–
6	BAT+
7	PS
8	NC
9	FG(SHIELD)
10	NC

<Connector for motor>

<with Brake>

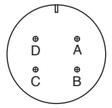

JL04V-2E20-4PE-B-R

MSME 1.0kW to 2.0kW
MDME 1.0kW to 2.0kW
MGME 0.9kW
MHME 1.0kW to 1.5kW

JL04HV-2E22-22PE-B-R

MSME 3.0kW to 5.0kW
MDME 3.0kW to 5.0kW
MGME 2.0kW to 3.0kW
MHME 2.0kW to 5.0kW

PIN No.	Application
A	U-phase
B	V-phase
C	W-phase
D	Ground

<without Brake>

JL04V-2E20-18PE-B-R

MSME 1.0kW to 2.0kW
MDME 1.0kW to 2.0kW
MGME 0.9kW
MHME 1.0kW to 1.5kW

PIN No.	Application
G	Brake
H	Brake
A	NC
F	U-phase
I	V-phase
B	W-phase
E	Ground
D	Ground
C	NC

JL04V-2E24-11PE-B-R

200V:
MSME 3.0kW to 5.0kW
MDME 3.0kW to 5.0kW
MGME 2.0kW to 3.0kW
MHME 2.0kW to 5.0kW
400V:
MSME 1.0kW to 5.0kW
MDME 1.0kW to 5.0kW
MGME 0.9kW to 3.0kW
MHME 1.0kW to 5.0kW

PIN No.	Application
A	Brake
B	Brake
C	NC
D	U-phase
E	V-phase
F	W-phase
G	Ground
H	Ground
I	NC

<Remarks> Do not connect anything to NC.

Junction Cable for Encoder

Part No.	MFECA0 * * 0EAM	Compatible motor output	MSMD 50W to 750W, MHMD 200W to 750W
Specifications	For 20-bit incremental encoder (Without battery box)		

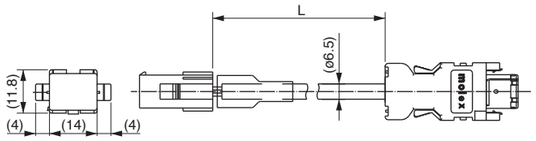

Title	Part No.	Manufacturer
Connector	55100-0670	Molex Inc
Connector	172160-1	Tyco Electronics AMP
Connector pin	170365-1	
Cable	0.20mm²×3P	Oki Electric Cable Co., Ltd.

L (m)	Part No.
3	MFECA0030EAM
5	MFECA0050EAM
10	MFECA0100EAM
20	MFECA0200EAM

Part No.	MFECA0 * * 0EAE	Compatible motor output	MSMD 50W to 750W, MHMD 200W to 750W
Specifications	For 17-bit absolute encoder (With battery box)		

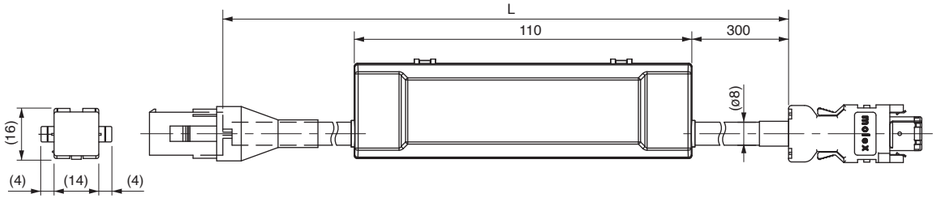

Title	Part No.	Manufacturer
Connector	55100-0670	Molex Inc
Connector	172161-1	Tyco Electronics AMP
Connector pin	170365-1	
Cable	0.20mm²×4P	Oki Electric Cable Co., Ltd.

L (m)	Part No.
3	MFECA0030EAE
5	MFECA0050EAE
10	MFECA0100EAE
20	MFECA0200EAE

Part No.	MFECA0 * * 0MJD	Compatible motor output	MSME 50W to 750W
Specifications	For 20-bit incremental encoder (Without battery box)		

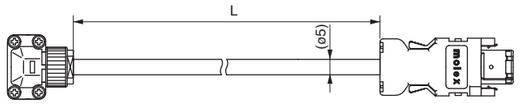

Title	Part No.	Manufacturer
Connector	55100-0670	Molex Inc
Connector	JN6FR07SM1	Japan Aviation Electronics Ind.
Connector pin	LY10-C1-A1-10000	
Cable	AWG24×4P, AWG22×2P	Hitachi Cable, Ltd.

L (m)	Part No.
3	MFECA0030MJD
5	MFECA0050MJD
10	MFECA0100MJD
20	MFECA0200MJD

Part No.	MFECA0 * * 0MJE	Compatible motor output	MSME 50W to 750W
Specifications	For 17-bit absolute encoder (With battery box)		

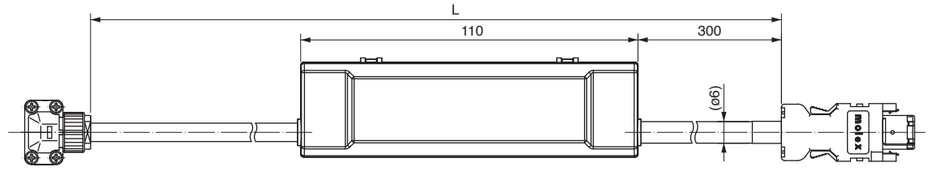

Title	Part No.	Manufacturer
Connector	55100-0670	Molex Inc
Connector	SMM-003T-P0.5	J.S.T Mfg. Co., Ltd.
Connector pin	ZMR-02	
Connector	JN6FR07SM1	Japan Aviation Electronics Ind.
Connector pin	LY10-C1-A1-10000	
Cable	AWG24 ×4P, AWG22×2P	Hitachi Cable, Ltd.

L (m)	Part No.
3	MFECA0030MJE
5	MFECA0050MJE
10	MFECA0100MJE
20	MFECA0200MJE

Part No.	MFECA0 * * 0ETD	Compatible motor output	0.9kW to 5.0kW
Specifications	For 20-bit incremental encoder (Without battery box)		

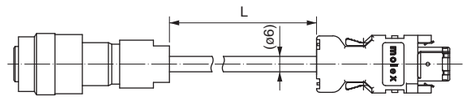

Title	Part No.	Manufacturer
Connector	55100-0670	Molex Inc
Connector	JN2DS10SL1-R	Japan Aviation Electronics Ind.
Connector pin	JN1-22-22S-PKG100	
Cable	0.2mm²×3P	Oki Electric Cable Co., Ltd.

L (m)	Part No.
3	MFECA0030ETD
5	MFECA0050ETD
10	MFECA0100ETD
20	MFECA0200ETD

Part No.	MFECA0 * * 0ETE	Compatible motor output	0.9kW to 5.0kW
Specifications	For 17-bit absolute encoder (With battery box)		

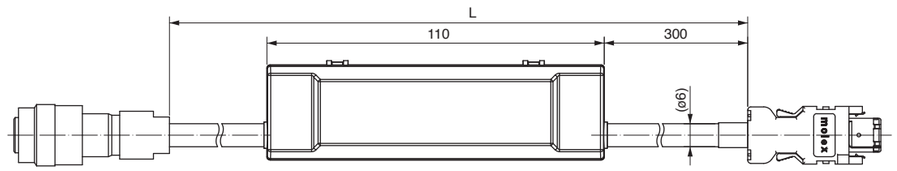

Title	Part No.	Manufacturer
Connector	55100-0670	Molex Inc
Connector	ZMR-02	J.S.T Mfg. Co., Ltd.
Connector pin	SMM-003T-P0.5	
Connector	JN2DS10SL1-R	Japan Aviation Electronics Ind.
Connector pin	JN1-22-22S-PKG100	
Cable	0.2mm² ×3P	Oki Electric Cable Co., Ltd.

L (m)	Part No.
3	MFECA0030ETE
5	MFECA0050ETE
10	MFECA0100ETE
20	MFECA0200ETE

Junction Cable for Motor (Without brake)

Part No.	MFMCA0 * * 0EED	Applicable model	MSMD 50W to 750W, MHMD 200W to 750W

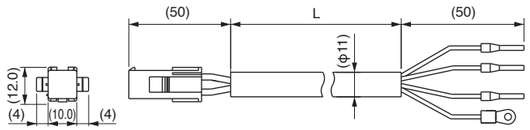

Title	Part No.	Manufacturer
Connector	172159-1	Tyco Electronics AMP
Connector pin	170366-1	
Rod terminal	AI0.75-8GY	Phoenix Contact
Nylon insulated round terminal	N1.25-M4	J.S.T Mfg. Co., Ltd.
Cable	ROBO-TOP 600V 0.75mm^2	Daiden Co.,Ltd.

L (m)	Part No.
3	MFMCA0030EED
5	MFMCA0050EED
10	MFMCA0100EED
20	MFMCA0200EED

Part No.	MFMCA0 * * 0NJD	Applicable model	MSME 50W to 750W

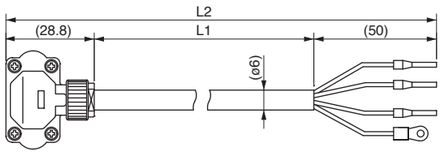

Title	Part No.	Manufacturer
Connector	JN8FT04SJ1	Japan Aviation Electronics Ind.
Connector pin	ST-TMH-S-C1B-3500	
Rod terminal	AI0.75-8GY	Phoenix Contact
Nylon insulated round terminal	N1.25-M4	J.S.T Mfg. Co., Ltd.
Cable	AWG18×4P	Hitachi Cable, Ltd.

L (m)	Part No.
3	MFMCA0030NJD
5	MFMCA0050NJD
10	MFMCA0100NJD
20	MFMCA0200NJD

Part No.	MFMCD0 * * 2ECD	Applicable model	MSME 1.0kW to 2.0kW, MDME 1.0kW to 2.0kW MHME 1.0kW to 1.5kW, MGME 0.9kW (All model 200V and 400V commonness)

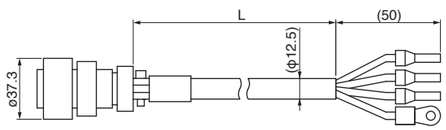

Title	Part No.	Manufacturer
Connector	JL04V-6A20-4SE-EB-R	Japan Aviation Electronics Ind.
Cable clamp	JL04-2022CK(14)-R	
Rod terminal	AI2.5-8BU	Phoenix Contact
Nylon insulated round terminal	N2-M4	J.S.T Mfg. Co., Ltd.
Cable	ROBO-TOP 600V 2.0mm^2	Daiden Co.,Ltd.

L (m)	Part No.
3	MFMCD0032ECD
5	MFMCD0052ECD
10	MFMCD0102ECD
20	MFMCD0202ECD

Part No.	MFMCE0 * * 2ECD	Applicable model	MHME 2.0kW (200V and 400V commonness)

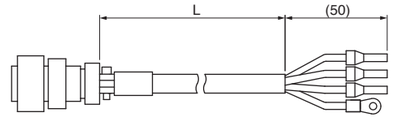

Title	Part No.	Manufacturer
Straight plug	JL04V-6A22-22SE-EB-R	Japan Aviation Electronics Ind.
Cable clamp	JL04-2022CK(14)-R	
Rod terminal	AI2.5-8BU	Phoenix Contact
Nylon insulated round terminal	N2-M4	J.S.T Mfg. Co., Ltd.
Cable	ROBO-TOP 600V 2.0mm^2	Daiden Co.,Ltd.

L (m)	Part No.
3	MFMCE0032ECD
5	MFMCE0052ECD
10	MFMCE0102ECD
20	MFMCE0202ECD

Part No.	MFMCA0 * * 3ECT	Applicable model	MSME 3.0kW to 5.0kW, MDME 3.0kW to 5.0kW MHME 3.0kW to 5.0kW, MGME 2.0kW to 3.0kW (All model 200V and 400V commonness)

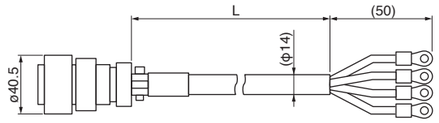

Title	Part No.	Manufacturer
Straight plug	JL04V-6A22-22SE-EB-R	Japan Aviation Electronics Ind.
Cable clamp	JL04-2022CK(14)-R	
Nylon insulated round terminal	N5.5-5	J.S.T Mfg. Co., Ltd.
Cable	ROBO-TOP 600V 3.5mm^2	Daiden Co.,Ltd.

L (m)	Part No.
3	MFMCA0033ECT
5	MFMCA0053ECT
10	MFMCA0103ECT
20	MFMCA0203ECT

Options Junction Cable for Motor (With brake)

Part No.	MFMCA0＊＊2FCD	Applicable model	MSME 1.0kW to 2.0kW (200V), MDME 1.0kW to 2.0kW (200V) MHME 1.0kW to 1.5kW (200V), MGME 0.9kW (200V)

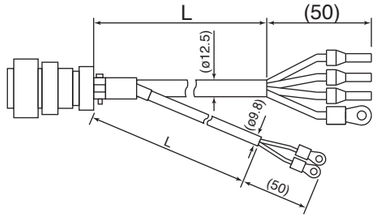

＊ This cable does not conform to IP67.

Title		Part No.	Manufacturer
Straight plug		JL04V-6A20-18SE-EB-R	Japan Aviation Electronics Ind.
Cable clamp		JL04-2022CK(14)-R	
Rod terminal		AI2.5-8BU	Phoenix Contact
Nylon insulated round terminal	Earth	N2-M4	J.S.T Mfg. Co., Ltd.
	Brake	N1.25-M4	
Cable		ROBO-TOP 600V 0.75mm^2 and ROBO-TOP 600V 2.0mm^2	Daiden Co.,Ltd.

L (m)	Part No.
3	MFMCA0032FCD
5	MFMCA0052FCD
10	MFMCA0102FCD
20	MFMCA0202FCD

Part No.	MFMCE0＊＊2FCD	Applicable model	MHME 2.0kW (200V), MSME 1.0kW to 2.0kW (400V), MDME 1.0kW to 2.0kW (400V) MHME 1.0kW to 2.0kW (400V), MGME 0.9kW (400V)

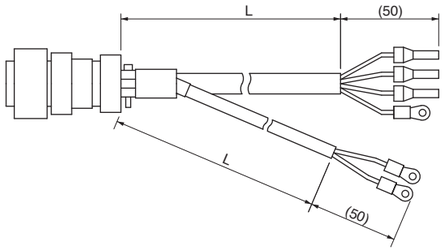

Title		Part No.	Manufacturer
Straight plug		JL04V-6A24-11SE-EB-R	Japan Aviation Electronics Ind.
Cable clamp		JL04-2428CK(17)-R	
Rod terminal		AI2.5-8BU	Phoenix Contact
Nylon insulated round terminal	Earth	N2-M4	J.S.T Mfg. Co., Ltd.
	Brake	N1.25-M4	
Cable		ROBO-TOP 600V 0.75mm^2 and ROBO-TOP 600V 2.0mm^2	Daiden Co.,Ltd.

L (m)	Part No.
3	MFMCE0032FCD
5	MFMCE0052FCD
10	MFMCE0102FCD
20	MFMCE0202FCD

Part No.	MFMCA0＊＊3FCT	Applicable model	MSME 3.0kW to 5.0kW, MDME 3.0kW to 5.0kW MHME 3.0kW to 5.0kW, MGME 2.0kW to 3.0kW (All model 200V and 400V commonness)

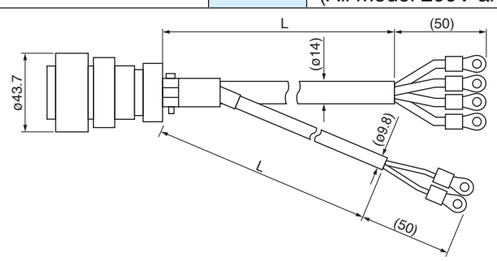

＊ This cable does not conform to IP67.

Title		Part No.	Manufacturer
Straight plug		JL04V-6A24-11SE-EB-R	Japan Aviation Electronics Ind.
Cable clamp		JL04-2428CK(17)-R	
Nylon insulated round terminal	Earth	N5.5-5	J.S.T Mfg. Co., Ltd.
	Brake	N1.25-M4	
Cable		ROBO-TOP 600V 0.75mm^2 and ROBO-TOP 600V 3.5mm^2	Daiden Co.,Ltd.

L (m)	Part No.
3	MFMCA0033FCT
5	MFMCA0053FCT
10	MFMCA0103FCT
20	MFMCA0203FCT

Options Junction Cable for Brake

Part No.	MFMCB0＊＊0GET	Applicable model	MSMD 50W to 750W, MHMD 200W to 750W

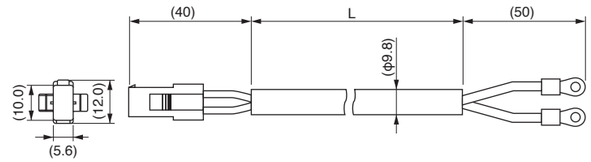

Title	Part No.	Manufacturer
Connector	172157-1	Tyco Electronics AMP
Connector pin	170366-1, 170362-1	
Nylon insulated round terminal	N1.25-M4	J.S.T Mfg. Co., Ltd.
Cable	ROBO-TOP 600V 0.75mm^2	Daiden Co.,Ltd.

L (m)	Part No.
3	MFMCB0030GET
5	MFMCB0050GET
10	MFMCB0100GET
20	MFMCB0200GET

Part No.	MFMCB0＊＊0PJT	Applicable model	MSME 50W to 750W

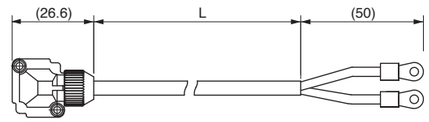

Title	Part No.	Manufacturer
Connector	JN4FT02SJMR	Japan Aviation Electronics Ind.
Connector pin	ST-TMH-S-C1B-3500	
Nylon insulated round terminal	N1.25-M4	J.S.T Mfg. Co., Ltd.
Cable	AWG22	Hitachi Cable, Ltd.

L (m)	Part No.
3	MFMCB0030PJT
5	MFMCB0050PJT
10	MFMCB0100PJT
20	MFMCB0200PJT

Connector Kit for Interface

Part No.	DV0P4350

• **Components**

Title	Part No.	Number	Manufacturer	Note
Connector	54306-5011	1	Molex Inc	For Connector X4 (50-pins)
Connector cover	54331-0501	1		

• Pin disposition (50 pins) (viewed from the soldering side)

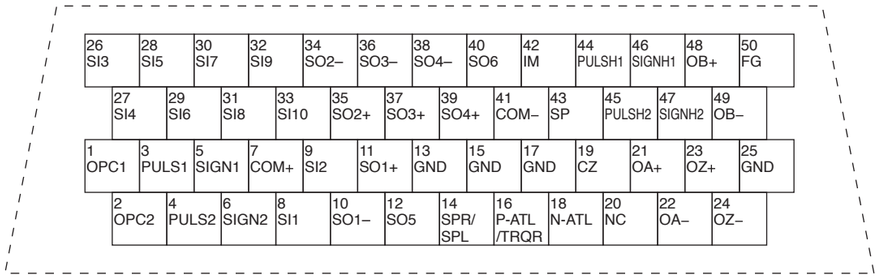

1) Check the stamped pin-No. on the connector body while making a wiring.
2) For the function of each signal title or its symbol, refer to the wiring example of the connector X4.
3) Do not connect anything to NC pins in the above table.

Interface Cable

Part No.	DV0P4360

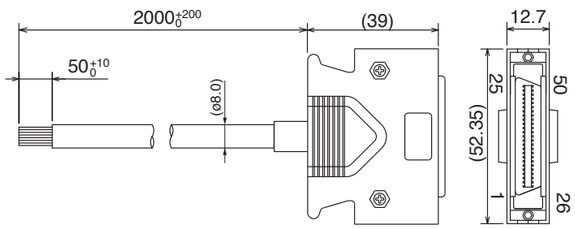

This 2 m connector cable contains AWG28 conductors.

• Table for wiring

Pin No.	color	Pin No.	color	Pin No.	color	Pin No.	color	Pin No.	color
1	Orange (Red1)	11	Orange (Black2)	21	Orange (Red3)	31	Orange (Red4)	41	Orange (Red5)
2	Orange (Black1)	12	Yellow (Black1)	22	Orange (Black3)	32	Orange (Black4)	42	Orange (Black5)
3	Gray (Red1)	13	Gray (Red2)	23	Gray (Red3)	33	Gray (Red4)	43	Gray (Red5)
4	Gray (Black1)	14	Gray (Black2)	24	Gray (Black3)	34	White (Red4)	44	White (Red5)
5	White (Red1)	15	White (Red2)	25	White (Red3)	35	White (Black4)	45	White (Black5)
6	White (Black1)	16	Yellow (Red2)	26	White (Black3)	36	Yellow (Red4)	46	Yellow (Red5)
7	Yellow (Red1)	17	Yel (Blk2)/Pink (Blk2)	27	Yellow (Red3)	37	Yellow (Black4)	47	Yellow (Black5)
8	Pink (Red1)	18	Pink (Red2)	28	Yellow (Black3)	38	Pink (Red4)	48	Pink (Red5)
9	Pink (Black1)	19	White (Black2)	29	Pink (Red3)	39	Pink (Black4)	49	Pink (Black5)
10	Orange (Red2)	20	——	30	Pink (Black3)	40	Gray (Black4)	50	Gray (Black5)

<Remarks>
Color designation of the cable
e.g.) Pin-1 Cable color : Orange (Red1) : One red dot on the cable

Connector Kit for Communication Cable (for RS485, RS232) (Excluding A5E Series)

Part No.	DV0PM20024

• **Components**

Title	Part No.	Manufacturer	Note
Connector	2040008-1	Tyco Electronics AMP	For Connector X2 (8-pins)

• Pin disposition of connector, connector X2

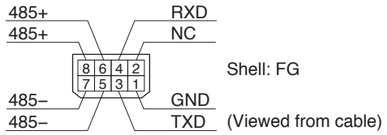

• Dimensions

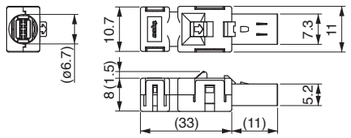

Connector Kit for Safety (Excluding A5E Series)

Part No.	DV0PM20025

• **Components**

Title	Part No.	Manufacturer	Note
Connector	2013595-1	Tyco Electronics AMP	For Connector X3 (8-pins)

• Pin disposition of connector, connector X3

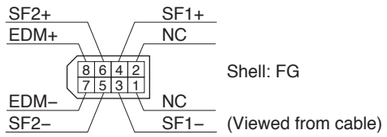

• Dimensions

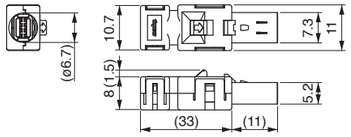

Connector Kit for External Scale (Excluding A5E Series)

Part No.	DV0PM20026

• **Components**

Title	Part No.	Manufacturer	Note
Connector	MUF-PK10K-X	J.S.T Mfg. Co., Ltd.	For Connector X5

• Dimensions

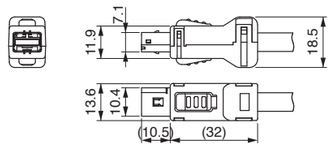

Connector Kit for Encoder

Part No.	DV0PM20010

• **Components**

Title	Part No.	Manufacturer	Note
Connector	55100-0670	Molex Inc	For Connector X6

<Remarks>
Connector X1: use with commercially available cable.

• Configuration of connector X1: USB mini-B

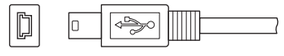

Connector Kit for Analog Monitor Signal

Part No.	DV0PM20031

• **Components**

Title	Part No.	Number	Manufacturer	Note
Connector	510040600	1	Molex Inc	For Connector X7 (6-pins)
Connector pin	500118100	6		

• Pin disposition of connector, connector X7

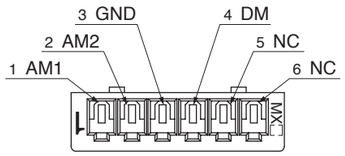

• Dimensions

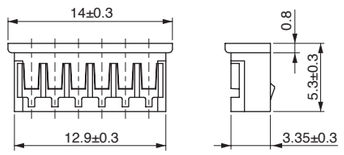

Connector Kit for Power Supply Input

Part No.	DV0PM20032 (For A to D-frame: Single row type)

• **Components**

Title	Part No.	Number	Manufacturer	Note
Connector	05JFAT-SAXGF	1	J.S.T Mfg. Co., Ltd.	For Connector XA
Handle lever	J-FAT-OT	2		

Part No.	DV0PM20033 (For A to D-frame: Double row type)

• **Components**

Title	Part No.	Number	Manufacturer	Note
Connector	05JFAT-SAXGSA-C	1	J.S.T Mfg. Co., Ltd.	For Connector XA
Handle lever	J-FAT-OT	2		

• Dimensions

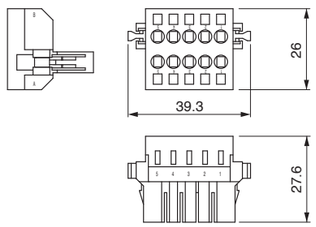

Part No.	DV0PM20044 (For E-frame)

• **Components**

Title	Part No.	Number	Manufacturer	Note
Connector	05JFAT-SAXGSA-L	1	J.S.T Mfg. Co., Ltd.	For Connector XA (E-frame)
Handle lever	J-FAT-OT-L	2		

Part No.	DV0PM20051 (For D-frame 400V)

• **Components**

Title	Part No.	Number	Manufacturer	Note
Connector	03JFAT-SAYGSA-M	1	J.S.T Mfg. Co., Ltd.	For Connector XA (D-frame)
Handle lever	J-FAT-OT-L	2		

Part No.	DV0PM20052 (For E-frame 400V)

• **Components**

Title	Part No.	Number	Manufacturer	Note
Connector	03JFAT-SAYGSA-L	1	J.S.T Mfg. Co., Ltd.	For Connector XA (E-frame)
Handle lever	J-FAT-OT-L	2		

Connector Kit for Control Power Supply Input

Part No.	DV0PM20053 (For D, E-frame 400V)

• **Components**

Title	Part No.	Number	Manufacturer	Note
Connector	02MJFAT-SAGF	1	J.S.T Mfg. Co., Ltd.	For Connector XC (D, E-frame)
Handle lever	MJFAT-0T	2		

Connector Kit for Regenerative Resistor Connection (E-frame)

Part No.	DV0PM20045 (For E-frame 200V/400V)

• **Components**

Title	Part No.	Number	Manufacturer	Note
Connector	04JFAT-SAXGSA-L	1	J.S.T Mfg. Co., Ltd.	200V: For Connector XC 400V: For Connector XD ※ジャンパー線も付属しています。
Handle lever	J-FAT-OT-L	2		

Part No.	DV0PM20055 (For D-frame 400V)

• **Components**

Title	Part No.	Number	Manufacturer	Note
Connector	04JFAT-SAXGSA-M	1	J.S.T Mfg. Co., Ltd.	For Connector XD
Handle lever	J-FAT-OT-L	2		

Connector Kit for Motor Connection (Driver side)

Part No.	DV0PM20034 (For A to D-frame 100V/200V)

• **Components**

Title	Part No.	Number	Manufacturer	Note
Connector	06JFAT-SAXGF	1	J.S.T Mfg. Co., Ltd.	For Connector XB ※ジャンパー線も付属しています。
Connector pin	J-FAT-OT	2		

Part No.	DV0PM20046 (For E-frame 200V/400V)

• **Components**

Title	Part No.	Number	Manufacturer	Note
Connector	03JFAT-SAXGSA-L	1	J.S.T Mfg. Co., Ltd.	For Connector XB (E-frame)
Handle lever	J-FAT-OT-L	2		

Part No.	DV0PM20054 (For D-frame 400V)

• **Components**

Title	Part No.	Number	Manufacturer	Note
Connector	03JFAT-SAXGSA-M	1	J.S.T Mfg. Co., Ltd.	For Connector XB (D-frame)
Handle lever	J-FAT-OT-L	2		

Connector Kit for Motor/Encoder Connection

Part No.	DV0P4290	Applicable model	MSMD 50W to 750W, MHMD 200W to 750W (absolute encoder type)

• **Components**

Title	Part No.	Number	Manufacturer	Note
Connector	55100-0670	1	Molex Inc	For Connector X6 (6-pins)
Connector	172161-1	1	Tyco Electronics AMP	For junction cable to encoder (9-pins)
Connector pin	170365-1	9		
Connector	172159-1	1	Tyco Electronics AMP	For junction cable to motor power (4-pins)
Connector pin	170366-1	4		

• Pin disposition of connector, connector X6

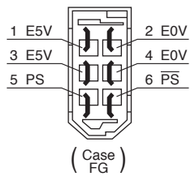

• Pin disposition of junction cable for motor power

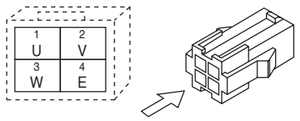

• Pin disposition of junction cable for encoder

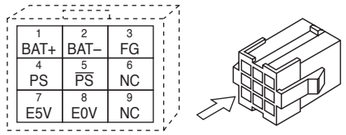

* When you connect the battery for absolute encoder, refer to P.125, "When you make your own cable for 17-bit absolute encoder"

Part No.	DV0P4380	Applicable model	MSMD 50W to 750W, MHMD 200W to 750W (incremental encoder type)

• **Components**

Title	Part No.	Number	Manufacturer	Note
Connector	55100-0670	1	Molex Inc	For Connector X6 (6-pins)
Connector	172160-1	1	Tyco Electronics AMP	For junction cable to encoder (6-pins)
Connector pin	170365-1	6		
Connector	172159-1	1	Tyco Electronics AMP	For junction cable to motor power (4-pins)
Connector pin	170366-1	4		

• Pin disposition of connector, connector X6

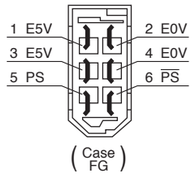

• Pin disposition of junction cable for motor power

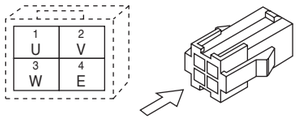

• Pin disposition of junction cable for encoder

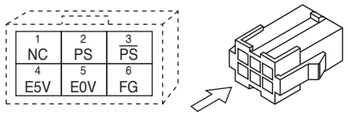

Part No.	DV0PM20035	Applicable model	MSME 50W to 750W

• **Components**

Title	Part No.	Number	Manufacturer	Note
Connector	55100-0670	1	Molex Inc	For Connector X6 (6-pins)
Encoder plug connector	JN6FR07SM1	1	Japan Aviation Electronics Ind.	For junction cable to encoder (7-pins)
Socket contact	LY10-C1-A1-10000	7		
Motor plug connector	JN8FT04SJ1	1	Japan Aviation Electronics Ind.	For junction cable to motor power (4-pins)
Socket contact	ST-TMH-S-C1B-3500	4		

• Pin disposition of connector, connector X3

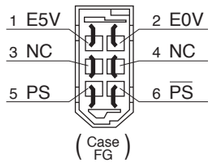

• Pin disposition of junction cable for motor power

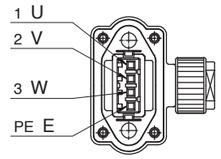

• Pin disposition of junction cable for encoder

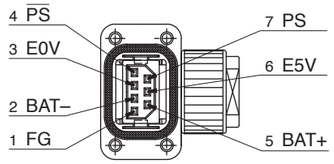

※インクリメンタルエンコーダの場合は
２ピンと５ピンは使用しません。

Part No.	DV0PM20036	Applicable model	MSME 1.0kW to 2.0kW, MDME 1.0kW to 2.0kW MHME 1.0kW to 1.5kW, MGME 0.9kW (All model 200V and 400V commonness)	Without brake

• **Components**

Title	Part No.	Number	Manufacturer	Note
Connector	55100-0670	1	Molex Inc	For Connector X6 (6-pins)
Encoder connector	JN2DS10SL1-R	1	Japan Aviation Electronics Ind.	For junction cable to encoder
Connector pin	JN1-22-22S-PKG100	5		
Motor connector	JL04V-6A-20-4SE-EB-R	1	Japan Aviation Electronics Ind.	For junction cable to motor power
Cable clamp	JL04-2022CK(14)-R	1		

Part No.	DV0PM20037	Applicable model	MSME 3.0kW to 5.0kW, MDME 3.0kW to 5.0kW MHME 2.0kW to 5.0kW, MGME 2.0kW to 3.0kW (All model 200V and 400V commonness)	Without brake

• **Components**

Title	Part No.	Number	Manufacturer	Note
Connector	55100-0670	1	Molex Inc	For Connector X6 (6-pins)
Encoder connector	JN2DS10SL1-R	1	Japan Aviation Electronics Ind.	For junction cable to encoder
Connector pin	JN1-22-22S-PKG100	5		
Motor connector	JL04V-6A22-22SE-EB-R	1	Japan Aviation Electronics Ind.	For junction cable to motor power
Cable clamp	JL04-2022CK(14)-R	1		

Part No.	DV0PM20038	Applicable model	MSME 1.0kW to 2.0kW, MDME 1.0kW to 2.0kW MHME 1.0kW to 1.5kW, MGME 0.9kW (All model 200V)	With brake

• **Components**

Title	Part No.	Number	Manufacturer	Note
Connector	55100-0670	1	Molex Inc	For Connector X6 (6-pins)
Encoder connector	JN2DS10SL1-R	1	Japan Aviation Electronics Ind.	For junction cable to encoder
Connector pin	JN1-22-22S-PKG100	5		
Motor connector	JL04V-6A20-18SE-EB-R	1	Japan Aviation Electronics Ind.	For junction cable to motor power
Cable clamp	JL04-2022CK(14)-R	1		

Part No.	DV0PM20039	Applicable model	(200V) MSME 3.0kW to 5.0kW, MDME 3.0kW to 5.0kW MHME 2.0kW to 5.0kW, MGME 2.0kW to 3.0kW (400V) MSME 1.0kW to 5.0kW, MDME 1.0kW to 5.0kW MHME 1.0kW to 5.0kW, MGME 0.9kW to 3.0kW	With brake

• **Components**

Title	Part No.	Number	Manufacturer	Note
Connector	55100-0670	1	Molex Inc	For Connector X6 (6-pins)
Encoder connector	JN2DS10SL1-R	1	Japan Aviation Electronics Ind.	For junction cable to encoder
Connector pin	JN1-22-22S-PKG100	5		
Motor connector	JL04V-6A24-11SE-EB-R	1	Japan Aviation Electronics Ind.	For junction cable to motor power
Cable clamp	JL04-2428CK(17)-R	1		

Connector Kit for Motor/Brake Connection

Part No.	DV0PM20040

• **Components**

Title	Part No.	Number	Manufacturer	Note
Connector	JN4FT02SJM-R	1	Japan Aviation Electronics Ind.	
Handle lever	ST-TMH-S-C1B-3500	2		

Battery For Absolute Encoder

Part No.	DV0P2990

• Lithium battery: 3.6V 2000mAh

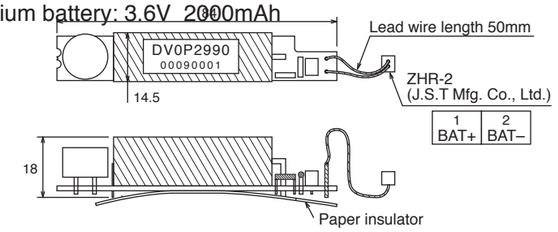

<Caution>
This battery is categorized as hazardous substance, and you may be required to present an application of hazardous substance when you transport by air (both passenger and cargo airlines).

Battery Box For Absolute Encoder

Part No.	DV0P4430

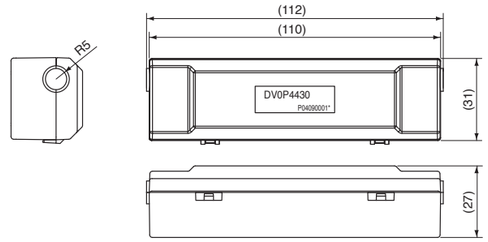

When you make your own cable for 17-bit absolute encoder

When you make your own cable for 17-bit absolute encoder, connect the optional battery for absolute encoder, DV0P2060 or DV0P2990 as per the wiring diagram below. Connector of the battery for absolute encoder shall be provided by customer as well.

<Caution>
Install and fix the battery securely. If the installation and fixing of the battery is not appropriate, it may cause the wire breakdown or damage of the battery.
Refer to the instruction manual of the battery for handling the battery.

• **Installation Place**

1) Indoors, where the products are not subjected to rain or direct sun beam.
2) Where the products are not subjected to corrosive atmospheres such as hydrogen sulfide, sulfurous acid, chlorine, ammonia, chloric gas, sulfuric gas, acid, alkaline and salt and so on, and are free from splash of inflammable gas, grinding oil, oil mist, iron powder or chips and etc.
3) Well-ventilated and humid and dust-free place.
4) Vibration-free place

• **Wiring Diagram**

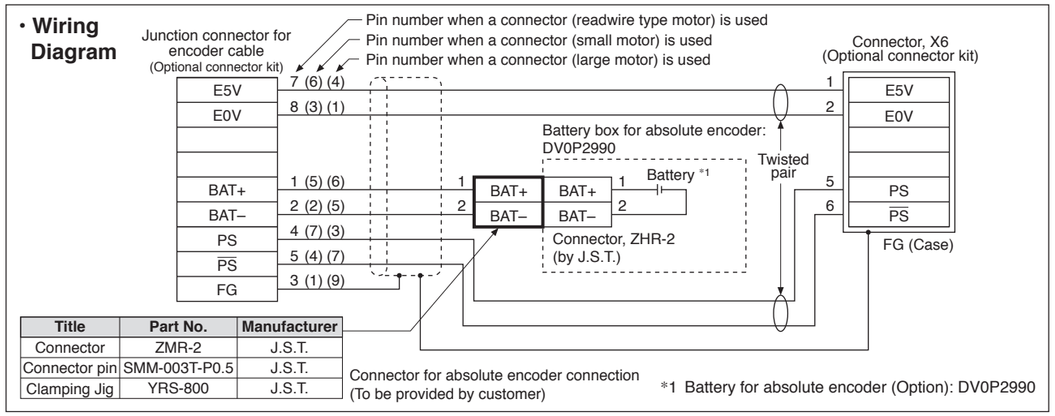

Title	Part No.	Manufacturer
Connector	ZMR-2	J.S.T.
Connector pin	SMM-003T-P0.5	J.S.T.
Clamping Jig	YRS-800	J.S.T.

Mounting Bracket

Part No.	DV0PM20027	Frame symbol of applicable driver	A-frame	Mounting screw	M4 × L6 Pan head 4pcs

Dimensions — Upper side / Bottom side

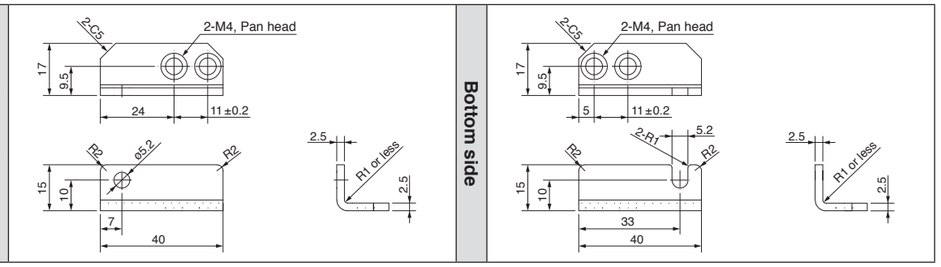

Part No.	DV0PM20028	Frame symbol of applicable driver	B-frame	Mounting screw	M4 × L6 Pan head 4pcs

Dimensions — Upper side / Bottom side

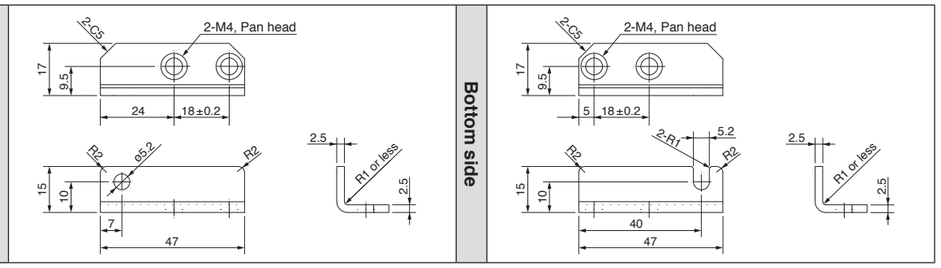

Part No.	DV0PM20029	Frame symbol of applicable driver	C-frame	Mounting screw	M4 × L6 Pan head 4pcs

Dimensions — Upper side / Bottom side

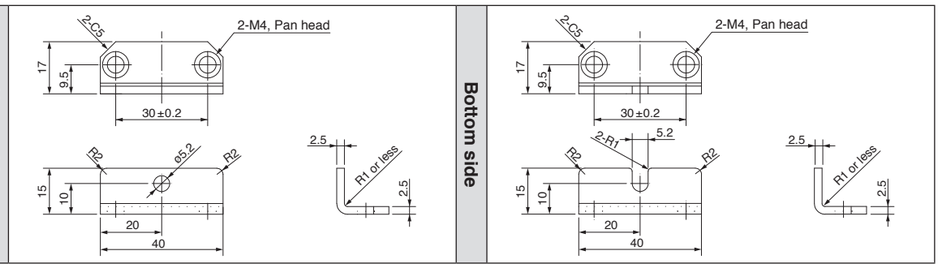

Part No.	DV0PM20030	Frame symbol of applicable driver	D-frame	Mounting screw	M4 × L6 Pan head 4pcs

Dimensions — Upper side / Bottom side

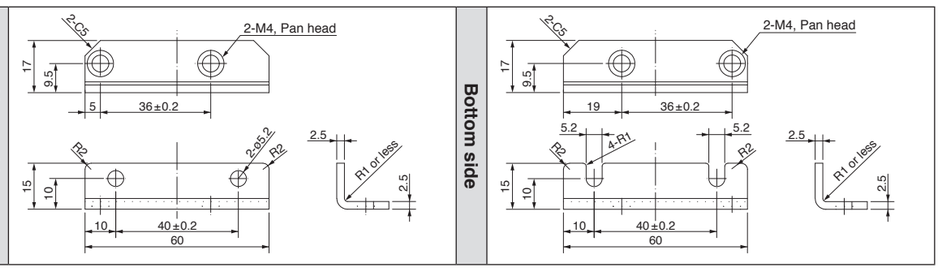

<Caution>

For E and F-frame, you con make a front end and back end mounting by changing the mounting direction of L-shape bracket (attachment).

Reactor

Fig.1

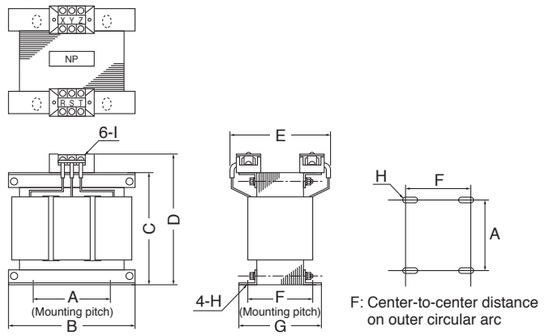

F: Center-to-center distance on outer circular arc

Fig.2

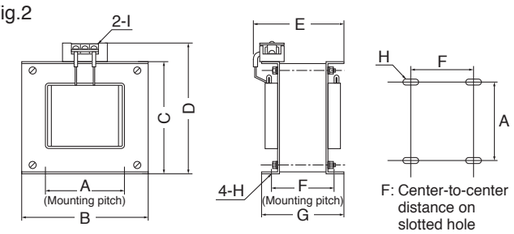

F: Center-to-center distance on slotted hole

	Part No.	A	B	C	D	E (Max)	F	G	H	I	Inductance (mH)	Rated current (A)
Fig.1	DV0P220	65±1	125±1	(93)	136Max	155	70+3/–0	85±2	4-7ϕ×12	M4	6.81	3
	DV0P221	60±1	150±1	(113)	155Max	130	60+3/–0	75±2	4-7ϕ×12	M4	4.02	5
	DV0P222	60±1	150±1	(113)	155Max	140	70+3/–0	85±2	4-7ϕ×12	M4	2	8
	DV0P223	60±1	150±1	(113)	155Max	150	79+3/–0	95±2	4-7ϕ×12	M4	1.39	11
	DV0P224	60±1	150±1	(113)	160Max	155	84+3/–0	100±2	4-7ϕ×12	M5	0.848	16
	DV0P225	60±1	150±1	(113)	160Max	170	100+3/–0	115±2	4-7ϕ×12	M5	0.557	25
Fig.2	DV0P227	55±0.7	80±1	66.5±1	110Max	90	41±2	55±2	4-5ϕ×10	M4	4.02	5
	DV0P228	55±0.7	80±1	66.5±1	110Max	95	46±2	60±2	4-5ϕ×10	M4	2	8

* For application, refer to P.16, 17 “Table of Part Numbers and Options”.

Harmonic restraint

On September, 1994, “Guidelines for harmonic restraint on heavy consumers who receive power through high voltage system or extra high voltage system” and “Guidelines for harmonic restraint on household electrical appliances and general-purpose articles” established by the Agency for Natural Resources and Energy of the Ministry of Economy, Trade and Industry (the ex-Ministry of International Trade and Industry). According to those guidelines, the Japan Electrical Manufacturers’ Association (JEMA) have prepared technical documents (procedure to execute harmonic restraint: JEM-TR 198, JEM-TR 199 and JEM-TR 201) and have been requesting the users to understand the restraint and to cooperate with us. On January, 2004, it has been decided to exclude the general-purpose inverter and servo driver from the “Guidelines for harmonic restraint on household electrical appliances and general-purpose articles”. After that, the “Guidelines for harmonic restraint on household electrical appliances and general-purpose articles” was abolished on September 6, 2004.

We are pleased to inform you that the procedure to execute the harmonic restraint on general-purpose inverter and servo driver was modified as follows.

1. All types of the general-purpose inverters and servo drivers used by specific users are under the control of the “Guidelines for harmonic restraint on heavy consumers who receive power through high voltage system or extra high voltage system”. The users who are required to apply the guidelines must calculate the equivalent capacity and harmonic current according to the guidelines and must take appropriate countermeasures if the harmonic current exceeds a limit value specified in a contract demand. (Refer to JEM-TR 210 and JEM-TR 225.)
2. The “Guidelines for harmonic restraint on household electrical appliances and general-purpose articles” was abolished on September 6, 2004. However, based on conventional guidelines, JEMA applies the technical documents JEM-TR 226 and JEM-TR 227 to any users who do not fit into the “Guidelines for harmonic restraint on heavy consumers who receive power through high voltage system or extra high voltage system” from a perspective on enlightenment on general harmonic restraint. The purpose of these guidelines is the execution of harmonic restraint at every device by a user as usual to the utmost extent.

<Remarks> When using a reactor, be sure to install one reactor to one servo driver.

Options External Regenerative Resistor

Part No.	Manufacturer's part No.	Specifications					Activation temperature of built-in thermostat
		Resistance	Rated power (reference) *				
			Free air [W]	with fan [W]			
		Ω		1m/s	2m/s	3m/s	
DV0P4280	RF70M	50	10	25	35	45	140±5°C B-contact Open/Close capacity (resistance load) 4A 125VAC 10000 times 2.5A 250VAC 10000 times
DV0P4281	RF70M	100	10	25	35	45	
DV0P4282	RF180B	25	17	50	60	75	
DV0P4283	RF180B	50	17	50	60	75	
DV0P4284	RF240	30	40	100	120	150	
DV0P4285	RH450F	20	52	130	160	200	
DV0PM20048	RF240TF	120	35	80	70	75	
DV0PM20049	RH450FTF	80	65	190	100	110	

Manufacturer : Iwaki Musen Kenkyusho

* Power with which the driver can be used without activating the built-in thermostat.

DV0P4280, DV0P4281

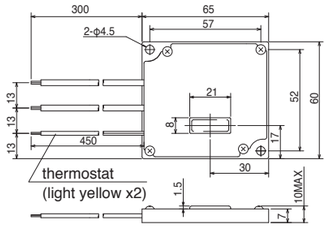

DV0P4282, DV0P4283

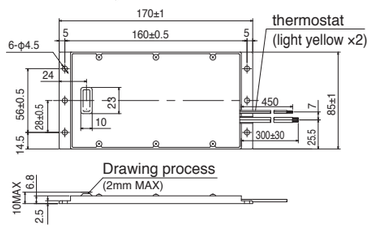

DV0P4284, DV0PM20048

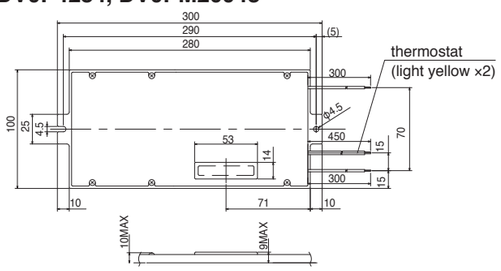

DV0P4285, DV0PM20049

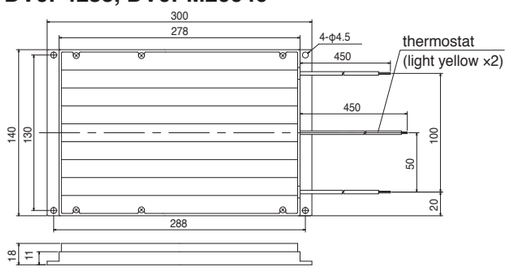

Frame	Power supply		
	Single phase, 100V	Single phase, 200V 3-phase, 200V	3-phase, 400V
A	DV0P4280	DV0P4281	—
B	DV0P4283	DV0P4283	
C	DV0P4282		
D	—	DV0P4284	DV0PM20048
E		DV0P4285	DV0PM20049
F		DV0P4285 × 2 in parallel	DV0PM20049 × 2 in parallel

<Remarks>

Thermal fuse is installed for safety. Compose the circuit so that the power will be turned off when the thermostat is activated. The thermal fuse may blow due to heat dissipating condition, working temperature, supply voltage or load fluctuation.

Make it sure that the surface temperature of the resistor may not exceed 100˚C at the worst running conditions with the machine, which brings large regeneration (such case as high supply voltage, load inertia is large or deceleration time is short) Install a fan for a forced cooling if necessary.

<Caution>

Regenerative resistor gets very hot.

Take preventive measures for fire and burns.
Avoid the installation near inflammable objects, and easily accessible place by hand.

Options Surge absorber for motor brake

Motor	Part No.	Manufacturer
MSME 50W to 750W	Z15D271	Ishizuka Electronics Co.
MHME 2.0kW to 5.0kW	Z15D151	Ishizuka Electronics Co.
MGME 0.9kW to 2.0kW		
MSME 1.0kW to 5.0kW		
MDME 4.0kW to 5.0kW		
MGME 3.0kW		
MDME 1.0kW to 3.0kW	TND09V-820KB00AAA0	Nippon Chemi_Con Co.
MHME 1.0kW to 1.5kW		

List of Peripheral Equipments

Manufacturer	Tel No. / Home Page	Peripheral components
Automation Controls Company Panasonic Electric Works, Co.,Ltd	81-6-6908-1131 http://panasonic-denko.co.jp/ac	Circuit breaker Surge absorber
Iwaki Musen Kenkyusho Co., Ltd.	81-44-833-4311 http://www.iwakimusen.co.jp/	Regenerative resistor
Nippon Chemi-Con Co.	81-3-5436-7711 http://www.chemi_con.co.jp/	Surge absorber for holding brake
Ishizuka Electronics Corp.	81-3-3621-2703 http://www.semitec.co.jp/	
TDK Corp.	81-3-5201-7229 http://www.tdk.co.jp/	Noise filter for signal lines
Okaya Electric Industries Co. Ltd.	81-3-4544-7040 http://www.okayatec.co.jp/	Surge absorber Noise filter
Japan Aviation Electronics Industry, Ltd.	81-3-3780-2717 http://www.jae.co.jp	Connector
Sumitomo 3M	81-3-5716-7290 http://www.mmmco.jp	
Tyco Electronics AMP k.k,	81-44-844-8111 http://www.tycoelectronics.com/ japan/amp	
Japan Molex Inc.	81-462-65-2313 http://www.molex.co.jp	
J.S.T. Mfg. Co., Ltd.	81-45-543-1271 http://www.jst-mfg.com/index_i.html	
Daiden Co., Ltd.	81-3-5805-5880 http://www.dyden.co.jp/	Cable
Mitutoyo Corp.	81-44-813-8236 http://www.mitutoyo.co.jp	External scale
Sony Manufacturing Systems Corp.	81-3-3490-3920 http://www.sonysms.co.jp/	

* The above list is for reference only. We may change the manufacturer without notice.

Contents

Setup support software “PANATERM” F2

Motor capacity selection software

AC servo motor capacity selection software F3

Option selection software for AC servo motor F3

Guide to the International System of Units (SI) F4

Selecting Motor Capacity F6

Request Sheet for Motor Selection F12

Connection between Driver and Controller F20

Index (Alphabetical order) F25

Sales Office F32

先進機能満載の次世代サポートツール

新しくなったセットアップ支援ソフトウェア「PANATERM」のご紹介

■パソコン上で監視･設定･解析

・USB通信により、アンプ・パソコン間のアクセスが高速に。
・4言語対応（日・英・中・韓）。
・Windows Vista、Windows XP（SP3）対応（現行32ビット版のみ）。

設定

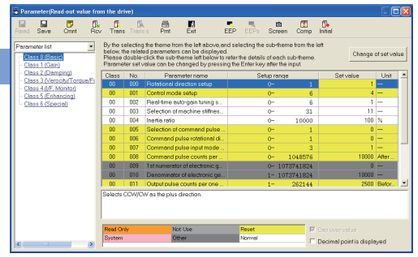

入力し易い階層別パラメータ表示

調整

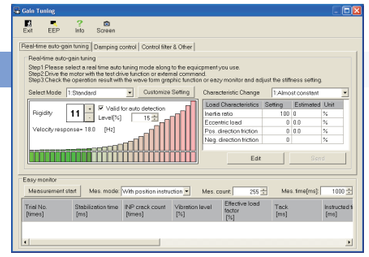

発振時剛性自動低減付きゲイン調整専用画面追加

モニタ

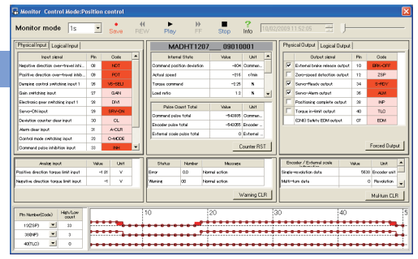

録再機能装備のユニバーサルモニタ

試運転

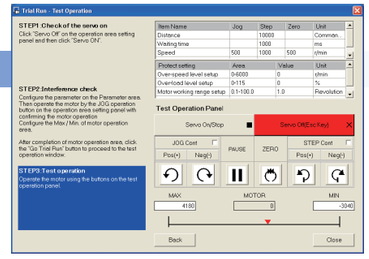

動作範囲制限で安心な試運転機能搭載

解析

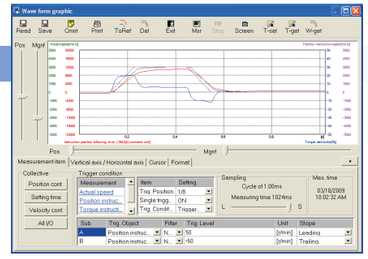

測定対象が大幅増加高機能波形グラフィック

その他

・周波数特性測定
・トラブルシュート
・アナログ入力調整
・Z相サーチ機能
・アラームモニタ
・外部ツール使用による機能拡張

Hardware configuration

Personal computer	CPU	Pentium 100MHz or more
	Memory	256MB or more (512MB recommended)
	Hard disk capacity	Vacancy of 512MB or more recommended
	OS	Windows® XP SP3, Windows® Vista SP1 (Japanese/US/Chinese version) ※64bit版Windows(x64)には非対応
	serial communication port	USB port
Display	Resolution	1024 × 768pix or more (desirably 1024 × 768)
	Number of colors	24bit colors (TrueColor) or more

Please download from our web site and use after install to the PC. **http://panasonic.co.jp/motor/**

AC servo motor capacity selection software

We have prepared PC software “M-SELECT” for AC servo motor capacity selection.
Consult our sales representative or authorized distributor.

・Three-step selection

1. Select components and specified values

Select appropriate mechanical parameter items and fill them with parameter values derived from the real machine. To simulate the target machine as practical as possible, use maximum number of parameters available.

2. Enter operation pattern

Input the planned operation pattern that will contain [speed and rotation standard] or [absolute position standard] with optional settings such as S-acceleration/deceleration.

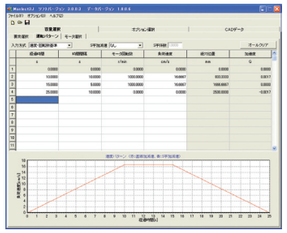

3. Select the motor

When the data required in step 1 and 2 above have been input, the software lists the motors, which will be appropriate to use with your machine. Select the motor that is best suitable for your machine application.

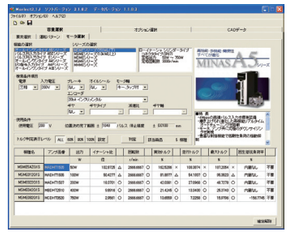

Details of motor

Once the motor is selected, specifications of the motor and amplifier, and details of reason for determination are displayed and may be printed out.

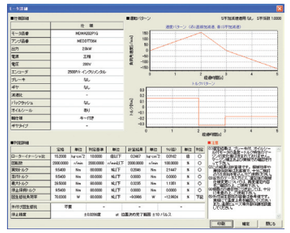

Option selection software for AC servo motor

We have prepared PC software to enable fast, easy, and correct option selection, a complicated job without the software.

・Two procedures for option selection

1. Selection according to driver series and motor type

Suitable option can be selected by selecting driver series, motor type and motor specification through pulldown menu.

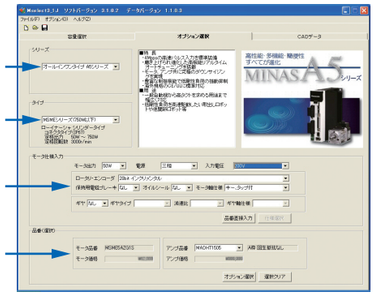

2. Entry of model number

If you know the model number based on the servo motor and driver currently used, enter the model number.

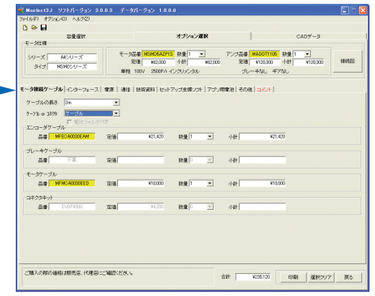

Result of selection

Tab sheet specific to each of option model numbers is used for easier identification of the desired option.

＊When you are using the motor capacity selection software, simply press [Option Selection] tab and the screen as shown right will appear.

Please download from our web site and use after install to the PC. **http://panasonic.co.jp/motor/**

Organization of the system of units

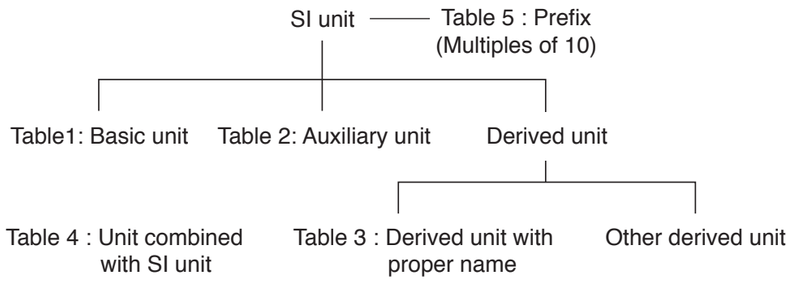

Table1: Basic unit

Quantity	Name of unit	Symbol of unit
Length	meter	m
Weight	kilogram	kg
Time	second	s
Current	ampere	A
Thermodynamic temperature	kelvin	K
Amount of substance	mol	mol
Luminous intensity	candela	cd

Table 2: Auxiliary unit

Quantity	Name of unit	Symbol of unit
Plane angle	radian	rad
Solid angle	steradian	sr

Table 3: Major derived unit with proper name

Quantity	Name	Symbol of unit	Derivation from basic unit, auxiliary unit or other derived unit
Frequency	hertz	Hz	$1Hz=1s^{-1}$
Force	newton	N	$1N=1kg\cdot m/s^2$
Pressure, Stress	pascal	Pa	$1Pa=1N/m^2$
Energy, Work, Amount of heat	joule	J	$1J=1N\cdot m$
Amount of work, Work efficiency, Power, Electric power	watt	W	$1W=1J/s$
Electric charge, Amount of electricity	coulomb	C	$1C=1A\cdot s$
Electric potential, Potential difference, Voltage, Electromotive force	volt	V	$1V=1J/C$
Electrostatic capacity, Capacitance	farad	F	$1F=1C/V$
Electric resistance	ohm	Ω	$1\Omega=1V/A$
Electric conductance	siemens	S	$1S=1\Omega^{-1}$
Magnetic flux	weber	Wb	$1Wb=1V\cdot s$
Magnetic flux density, Magnetic induction	tesla	T	$1T=1Wb/m^2$
Inductance	henry	H	$1H=1Wb/A$
Degree centigrade (Celsius)	degree centigrade (Celsius) / degree	˚C	$t˚C=(t+273.15)K$
Luminous flux	lumen	lm	$1lm=1cd\cdot sr$
Illuminance	lux	lx	$1lx=1lm/m^2$

Table 4: Unit combined with SI unit

Quantity	Name	Symbol of unit
Time	minute	min
	hour	h
	day	d
Plane angle	degree	°
	minute	'
	second	"
Volume	liter	l, L
Weight	ton	t

Table 5: Prefix

Multiples powered to unit	Prefix	
	Name	Symbol
10^{18}	exa	E
10^{15}	peta	P
10^{12}	tera	T
10^{9}	giga	G
10^{6}	mega	M
10^{3}	kilo	k
10^{2}	hecto	h
10	deca	da
10^{-1}	deci	d
10^{-2}	centi	c
10^{-3}	milli	m
10^{-6}	micro	μ
10^{-9}	nano	n
10^{-12}	pico	p
10^{-15}	femto	f
10^{-18}	atto	a

Major compatible unit

Quantity	Symbol of conventional unit	Symbol of SI unit and compatible unit	Conversion value
Length	μ (micron)	μ m	1μ=1μm (micrometer)
Acceleration	Gal	m/s^2	$1Gal=10^{-2}m/s^2$
	G	m/s^2	$1G=9.806\ 65m/s^2$
Frequency	c/s, c	Hz	1c/s=Hz
Revolving speed, Number of revolutions	rpm	s^{-1} or min^{-1}, r/min	$1rpm=1min^{-1}$
Weight	kgf	–	Same value
Mass	–	kg	
Weight flow rate	kgf/s	–	Same value
Mass flow rate	–	kg/s	
Specific weight	kgf/m^3	–	Same value
Density	–	kg/m^3	
Specific volume	m^3/kgf	m^3/kg	Same value
Load	kgf	N	1kgf=9.806 65N
Force	kgf	N	1kgf=9.806 65N
	dyn	N	$1dyn=10^{-3}N$
Moment of force	kgf-m	N-m	1kgf-m=9.806 N·m
Pressure	kgf/cm^2	Pa, bar (2) or kgf/cm^2	$1kgf/cm^2=9.806\ 65 \times 10^4Pa=0.980$
	at (Engineering atmospheric pressure)	Pa	665bar
	atm (Atmospheric pressure)	Pa	$1at=9.806\ 65 \times 10^4Pa$
	mH_2o, mAq	Pa	$1atm=1.013\ 25 \times 10^3Pa$
	mmHg	Pa or mmHg (2)	$1mH_2O=9.806\ 65 \times 10^3Pa$
	Torr	Pa	1mmHg=133.322Pa
Stress	kgf/mm^2	Pa or N/m^2	$1kgf/mm^2=9.806\ 65 \times 10^4Pa$
			$=9.806\ 65 \times 10^6N/m^2$
	kgf/cm^2	Pa or N/m^2	$1kgf/cm^2=9.806\ 65 \times 10^4Pa$
			$=9.806\ 65 \times 10^4N/m^2$
Elastic modulus	kgf/m^2	Pa or N/m^2	$1kgf/m^2=9.806\ 65Pa=9.806\ 65N/m^2$
			$1kgf/cm^2=9.806\ 65 \times 10^4N/m^2$
Energy, Work	kgf-m	J (joule)	1kgf·m=9.806 65J
	erg	J	$1erg=10^7J$
Work efficiency, Power	kgf-m/s	W (watt)	1kgf-m/s=9.806 65W
	PS	W	1PS=0.735 5kW
Viscosity	PP	Ps-s	1P=0.1Pa-s
Kinetic viscosity	St	mm^2/s	$10^{-2}St=1mm^2/s$
Thermodynamic temperature	K	K (kelvin)	1K=1K
Temperature interval	deg	K (3)	1deg=1K
Amount of heat	cal	J	1cal=4.186 05J
Heat capacity	cal/˚C	J/K (3)	1cal/˚C=4.186 05J/K
Specific heat, Specific heat capacity	cal/ (kgf·˚C)	cal/ (kgf·K)(3)	1cal/ (kgf·˚C)=4.186 05J/ (kg·K)
Entropy	cal/K	J/K	1cal/K=4.186 05J/K
Specific entropy	cal/ (kgf·K)	J/(kg·K)	1cal/ (kgf·K)=4.186 05J/ (kg·K)
Internal energy (Enthalpy)	cal	J	1cal=4.186 05J
Specific internal energy (Specific enthalpy)	cal/kgf	J/kg	1cal/kgf=4.186 05J/kg
Heat flux	cal/h	W	1kcal/h=1.162 79W
Heat flux density	cal/ ($h\cdot m^2$)	W/m^2	1kcal ($h\cdot m^2$)=1.162 79W/m^2
Thermal conductivity	cal/ (h·m·˚C)	W/ (m·K) (3)	1kcal (h·m·˚C)=1.162 79W/ (m·K)
Coefficient of thermal conductivity	cal/ ($h\cdot m^2\cdot$˚C)	W/ ($m^2\cdot$K) (3)	1kcal (h·m·˚C)=1.162 79W/ ($m^2\cdot$K)
Intensity of magnetic field	Oe	A/m	$1Oe=10^2/(4\pi)A/m$
Magnetic flux	Mx	Wb (weber)	$1Mx=10^{-3}Wb$
Magnetic flux density	Gs,G	T (tesla)	$1Gs=10^{-4}T$

Note
(1) Applicable to liquid pressure. Also applicable to atmospheric pressure of meteorological data, when "bar" is used in international standard.
(2) Applicable to scale or indication of blood pressure manometers.
(3) "˚C" can be substituted for "K".

Flow of motor selection

Flow of motor selection

1. Definition of mechanism to be driven by motor.

Define details of individual mechanical components (ball screw length, lead and pulley diameters, etc.)

<Typical mechanism>

Ball screw mechanism

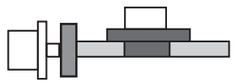

Belt mechanism

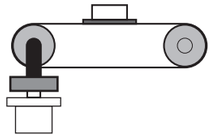

Rack & pinion, etc.

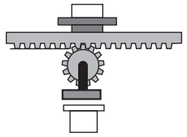

2. Definition of operating pattern.

Acceleration/deceleration time, Constant-velocity time, Stop time, Cycle time, Travel distance

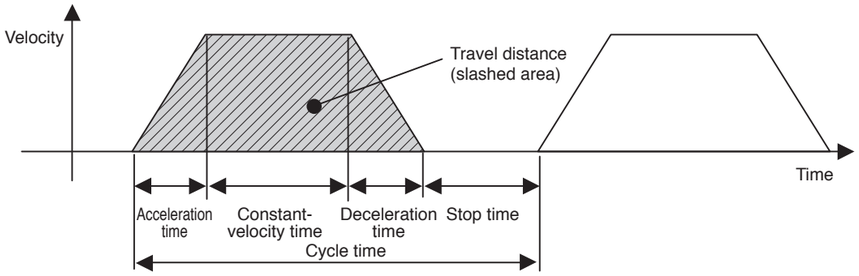

Note) Selection of motor capacity significantly varies depending on the operating pattern.
The motor capacity can be reduced if the acceleration/deceleration time and stop time are set as long as possible.

3. Calculation of load inertia and inertia ratio.

Calculate load inertia for each mechanical component. (Refer to "General inertia calculation method" described later.)
Divide the calculated load inertia by the inertia of the selected motor to check the inertia ratio.
For calculation of the inertia ratio, note that the catalog value of the motor inertia is expressed as "$\times 10^{-4}$kg·m^2".

4. Calculation of motor velocity

Calculate the motor velocity from the moving distance, acceleration / deceleration time and constant-velocity time.

5. Calculation of torque

Calculate the required motor torque from the load inertia, acceleration/deceleration time and constant-velocity time.

6. Calculation of motor

Select a motor that meets the above 3 to 5 requirements.

Description on the items related to motor selection

Description on the items related to motor selection

1. Torque

(1) Peak torque

Indicate the maximum torque that the motor requires during operation (mainly in acceleration and deceleration steps). The reference value is 80% or less of the maximum motor torque. If the torque is a negative value, a regenerative discharge resistor may be required.

(2) Traveling torque, Stop holding torque

Indicates the torque that the motor requires for a long time. The reference value is 80% or less of the rated motor torque. If the torque is a negative value, a regenerative discharge resistor may be required.

Traveling torque calculation formula for each mechanism

Ball screw mechanism

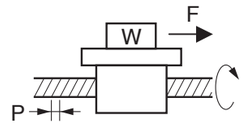

Traveling torque $T_f = \frac{P}{2\pi\eta}(\mu g W + F)$

W : Weight [kg]
P : Lead [m]
F : External force [N]
η : Mechanical efficiency
μ : Coefficient of friction
g : Acceleration of gravity 9.8[m/s^2]

Belt mechanism

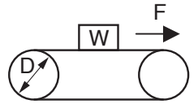

Traveling torque $T_f = \frac{D}{2\pi\eta}(\mu g W + F)$

W : Weight [kg]
P : Pulley diameter [m]
F : External force [N]
η : Mechanical efficiency
μ : Coefficient of friction
g : Acceleration of gravity 9.8[m/s^2]

(3) Effective torque

Indicates a root-mean-square value of the total torque required for running and stopping the motor per unit time. The reference value is approx. 80% or less of the rated motor torque.

$$T_{rms} = \sqrt{\frac{T_a^2 \times t_a + T_f^2 \times t_b + T_d^2 \times t_d}{t_c}}$$

T_a : Acceleration torque [N·m]
T_f : Traveling torque [N·m]
T_d : Deceleration torque [N·m]
t_a : Acceleration time [s]
t_b : Constant-velocity time [s]
t_d : Deceleration time [s]
t_c : Cycle time [s] (Run time + Stop time)

2. Motor velocity

Maximum velocity

Maximum velocity of motor in operation: The reference value is the rated velocity or lower value.
When the motor runs at the maximum velocity, you must pay attention to the motor torque and temperature rise. For actual calculation of motor velocity, see "Example of motor selection" described later.

Description on the items related to motor selection

3. Inertia and inertia ratio

Inertia is like the force to retain the current moving condition.
Inertia ratio is calculated by dividing load inertia by rotor inertia.
Generally, for motors with 750 W or lower capacity, the inertia ratio should be “20” or less. For motors with 1000 W or higher capacity, the inertia ratio should be “10” or less.
If you need quicker response, a lower inertia ratio is required.
(For example, when the motor takes several seconds in acceleration step, the inertia ratio can be further increased.)

General inertia calculation method

Shape	J calculation formula	Shape	J calculation formula
Disk 	$J = \frac{1}{8} WD^2$ [kg·m²] W : Weight [kg] D : Outer diameter [m]	**Hollow cylinder** 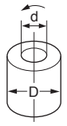	$J = \frac{1}{8} W(D^2 + d^2)$ [kg·m²] W : Weight [kg] D : Outer diameter [m] d : Inner diameter [m]
Prism 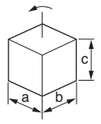	$J = \frac{1}{12} W(a^2 + b^2)$ [kg·m²] W : Weight [kg] a, b, c : Side length [m]	**Uniform rod** 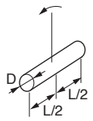	$J = \frac{1}{48} W(3D^2 + 4L^2)$ [kg·m²] W : Weight [kg] D : Outer diameter [m] L : Length [m]
Straight rod 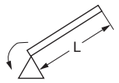	$J = \frac{1}{3} WL^2$ [kg·m²] W : Weight [kg] L : Length [m]	**Separated rod** 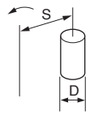	$J = \frac{1}{8} WD^2 + WS^2$ [kg·m²] W : Weight [kg] D : Outer diameter [m] S : Distance [m]
Reduction gear 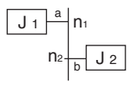	Inertia on shaft "a" $J = J_1 + (\frac{n_2}{n_1})^2 J_2$[kg·m²] n_1 : A rotational speed of a shaft [r/min] n_2 : A rotational speed of b shaft [r/min]		
Conveyor 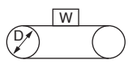	$J = \frac{1}{4} WD^2$ [kg·m²] W : Workpiece weight on conveyor [kg] D : Drum diameter [m] * Excluding drum J	**Ball screw** 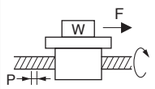	$J = J_B + \frac{W \cdot P^2}{4\pi^2}$ [kg·m²] W : Weight [kg] P : Lead J_B : J of ball screw

If weight (W [kg]) is unknown, calculate it with the following formula:

Weight W[kg]=Density ρ [kg/m³] x Volume V[m³]

Density of each material

Iron ρ =7.9 x 10³ [kg/m³] Aluminum ρ =2.8 x 10³ [kg/m³]

Brass ρ =8.5 x 10³ [kg/m³]

To drive ball screw mechanism

To drive ball screw mechanism

1. Example of motor selection for driving ball screw mechanism

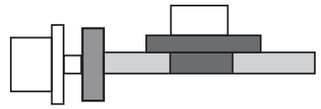

Workpiece weight W_A = 10 [kg]
Ball screw length B_L = 0.5 [m]
Ball screw diameter B_D = 0.02 [m]
Ball screw pitch B_P = 0.02 [m]
Ball screw efficiency $B\eta$ = 0.9
Travel distance 0.3[m]
Coupling inertia $J_C = 10 \times 10^{-6}$ [kg·m²] (Use manufacturer-specified catalog value, or calculation value.)

2. Running pattern :

Acceleration time ta = 0.1 [s]
Constant-velocity time tb = 0.8 [s]
Deceleration time td = 0.1 [s]
Cycle time tc = 2 [s]
Travel distance 0.3[m]

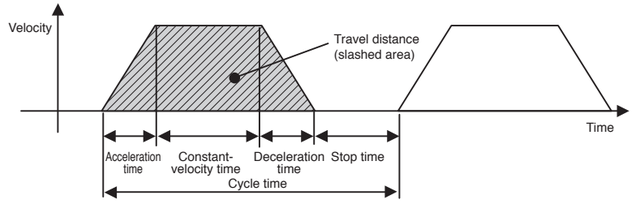

3. Ball screw weight

$$B_W = \rho \times \pi \times \left(\frac{B_D}{2}\right)^2 \times B_L = 7.9 \times 10^3 \times \pi \times \left(\frac{0.02}{2}\right)^2 \times 0.5$$
$$= 1.24 \text{ [kg]}$$

4. Load inertia

$$J_L = J_C + J_B = J_C + \frac{1}{8} B_W \times B_D^2 + \frac{W_A \cdot B_P^2}{4\pi^2}$$
$$= 0.00001 + (1.24 \times 0.02^2) / 8 + 10 \times 0.02^2 / 4\pi^2$$
$$= 1.73 \times 10^{-4} \text{ [kg·m}^2\text{]}$$

5. Provisional motor selection

In case of 200 W motor : $J_M = 0.17 \times 10^{-4}$ [kg·m²]

6. Calculation of inertia ratio

$J_L / J_M = 1.73 \times 10^{-4} / 0.17 \times 10^{-4}$ Therefore, the inertia ratio is "10.2" (less than "20")
(In case of 100 W motor: $J_M = 0.064 \times 10^{-4}$ Therefore, the inertia ratio is "27.0".)

7. Calculation of maximum velocity (Vmax)

$$\frac{1}{2} \times \text{Acceleration time} \times V_{max} + \text{Constant-velocity time} \times V_{max} + \frac{1}{2} \times \text{Deceleration time} \times V_{max} = \text{Travel distance}$$
$$\frac{1}{2} \times 0.1 \times V_{max} + 0.8 \times V_{max} + \frac{1}{2} \times 0.1 \times V_{max} = 0.3$$
$$0.9 \times V_{max} = 0.3$$
$$= 0.3 / 0.9 = 0.334 \text{ [m/s]}$$

8. Calculation of motor velocity (N [r/min]) Ball screw lead per resolution: B_P = 0.02 [m]

$$N = 0.334 / 0.02 = 16.7 \text{ [r/s]}$$
$$= 16.7 \times 60 = 1002 \text{ [min}^{-1}\text{]} < 3000 \text{ [min}^{-1}\text{]}$$ (Rated velocity of 200W motor)

9. Calculation of torque

Traveling torque
$$T_f = \frac{B_P}{2\pi B\eta} (\mu g W_A + F) = \frac{0.02}{2\pi \times 0.9} (0.1 \times 9.8 \times 10 + 0)$$
$$= 0.035 \text{ [N·m]}$$

Acceleration torque
$$T_a = \frac{(J_L + J_M) \times 2\pi N \text{[r/s]}}{\text{Acceleration time [s]}} + \text{Traveling torque}$$
$$= \frac{(1.73 \times 10^{-4} + 0.17 \times 10^{-4}) \times 2\pi \times 16.7}{0.1} + 0.035$$
$$= 0.199 + 0.035 = 0.234 \text{ [N·m]}$$

To drive ball screw mechanism Example of motor selection

Deceleration torque $T_d = \dfrac{(J_L + J_M) \times 2\pi N[r/s]}{\text{Deceleration time}[s]}$ – Traveling torque

$= \dfrac{(1.73 \times 10^{-4} + 0.17 \times 10^{-4}) \times 2\pi \times 16.7}{0.1} - 0.035$

$= 0.199 - 0.035 = 0.164\ [N{\cdot}m]$

10. Verification of maximum torque

Acceleration torque = $T_a = 0.234\ [N{\cdot}m] < 1.91\ [N{\cdot}m]$ (Maximum torque of 200 W motor)

11. Verification of effective torque

$$T_{rms} = \sqrt{\frac{T_a^2 \times t_a + T_f^2 \times t_b + T_d^2 \times t_d}{t_c}}$$

$$= \sqrt{\frac{0.234^2 \times 0.1 + 0.035^2 \times 0.8 + 0.164^2 \times 0.1}{2}}$$

$= 0.065\ [N{\cdot}m] < 0.64\ [N{\cdot}m]$ (Rated torque of 200 W motor)

12. Judging from the inertia ratio calculated above, selection of 200 W motor is preferable, although the torque margin is significantly large.

Example of motor selection

Example of motor selection for timing belt mechanism

1.Mechanism

Workpiece weight	W_A =3[kg] (including belt)
Pulley diameter	P_D =0.05[m]
Pulley weight	W_P =0.5[kg] (Use manufacturer-specified catalog value, or calculation value.)
Mechanical efficiency	$B\eta$ = 0.8
Coupling inertia	J_C = 0 (Direct connection to motor shaft)
Belt mechanism inertia	J_B
Pulley inertia	J_P

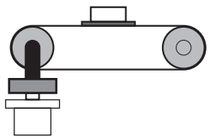

2. Running pattern

Acceleration time	t_a = 0.1[s]
Constant-velocity time	t_b = 0.8[s]
Deceleration time	t_d = 0.1[s]
Cycle time	t_c = 2[s]
Travel distance	1[m]

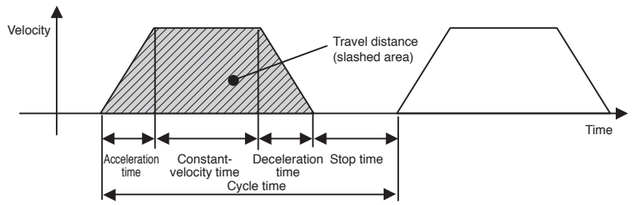

3. Load inertia $J_L = J_C + J_B + J_P$

$= J_C + \frac{1}{4} W_A \times P_D^2 + \frac{1}{8} W_P \times P_D^2 \times 2$

$= 0 + \frac{1}{4} \times 3 \times 0.05^2 + \frac{1}{8} \times 0.5 \times 0.05^2 \times 2$

$= 0.00219 = 21.9 \times 10^{-4}\ [kg{\cdot}m^2]$

4. Provisional motor selection

In case of 750 W motor : $J_M = 1.31 \times 10^{-4}\ [kg{\cdot}m^2]$

5. Calculation of inertia ratio

$J_L / J_M = 21.9 \times 10^{-4} / 1.31 \times 10^{-4}$ Therefore, the inertia ratio is "16.7" (less than "20")

Example of motor selection

6. Calculation of maximum velocity (Vmax)

$\frac{1}{2}$ × Acceleration time × Vmax + Constant-velocity time × Vmax + $\frac{1}{2}$ × Deceleration time × Vmax = Travel distance

$\frac{1}{2} \times 0.1 \times V_{max} + 0.8 \times V_{max} + \frac{1}{2} \times 0.1 \times V_{max} = 1$

$0.9 \times V_{max} = 1$

$V_{max} = 1 / 0.9 = 1.111[m/s]$

7. Calculation of motor velocity (N [r/min])

A single rotation of pulley : $\pi \times P_D = 0.157[m]$

$N = 1.11 / 0.157 = 7.08[r/s]$

$= 7.08 \times 60 = 424.8[min^{-1}] < 3000[min^{-1}]$ (Rated velocity of 750 W motor)

8. Calculation of torque

Traveling torque $T_f = \dfrac{P_D}{2\eta}(\mu g W_A + F) = \dfrac{0.05}{2 \times 0.8}(0.1 \times 9.8 \times 3 + 0)$

$= 0.092[N{\cdot}m]$

Acceleration torque $T_a = \dfrac{(J_L + J_M) \times 2\pi N[r/s]}{\text{Acceleration time}[s]}$ + Traveling torque

$= \dfrac{(21.9 \times 10^{-4} + 1.31 \times 10^{-4}) \times 2\pi \times 7.08}{0.1} + 0.092$

$= 1.032 + 0.092 = 1.124[N{\cdot}m]$

Deceleration torque $T_d = \dfrac{(J_L + J_M) \times 2\pi N[r/s]}{\text{Deceleration time}[s]}$ – Traveling torque

$= \dfrac{(21.9 \times 10^{-4} + 1.31 \times 10^{-4}) \times 2\pi \times 7.08}{0.1} - 0.092$

$= 1.032 - 0.092 = 0.94[N{\cdot}m]$

9. Verification of maximum torque

Acceleration torque $T_a = 1.124[N{\cdot}m] < 7.1[N{\cdot}m]$ (Maximum torque of 750 W motor)

10. Verification of effective torque

$$T_{rms} = \sqrt{\frac{T_a^2 \times t_a + T_f^2 \times t_b + T_d^2 \times t_d}{t_c}}$$

$$= \sqrt{\frac{1.124^2 \times 0.1 + 0.092^2 \times 0.8 + 0.94^2 \times 0.1}{2}}$$

$= 0.333\ [N{\cdot}m] < 2.4\ [N{\cdot}m]$ (Rated torque of 750 W motor)

11. Judging from the above calculation result, selection of 750W motor is acceptable.

Request Sheet for Motor Selection

Customer Service Technical Support Center, Motor Company, Panasonic Corporation

Request for Motor Selection Ⅰ : Ball screw drive

1. Driven mechanism and running data

1) Travel distance of the work load per one cycle	ℓ_1:	mm
2) Cycle time	t_0:	s
(Fill in items 3) and 4) if required.)		
3) Acceleration time	t_a:	s
4) Deceleration time	t_d:	s
5) Stopping time	t_s:	s
6) Max. velocity	V:	mm/s
7) External force	F:	kg
8) Positioning accuracy of the work load	±	mm
9) Total weight of the work load and the table	W_A:	kg
10) Power supply voltage		V
11) Diameter of the ball screw		mm
12) Total length of the ball		mm
13) Lead of the ball screw		mm

Running pattern

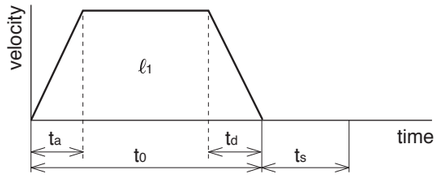

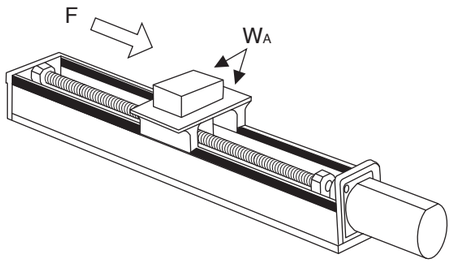

14) Traveling direction (horizontal, vertical etc.)

2. Other data

(Fill the details on specific mechanism and its configurations in the following blank.)

Company name :

Department/Section :

Name :

Address :

Tel :

Fax :

E-mail address:

Request Sheet for Motor Selection

Customer Service Technical Support Center, Motor Company, Panasonic Corporation

Request for Motor Selection Ⅱ : Timing pulley + Ball screw drive

1. Driven mechanism and running data

1) Travel distance of the work load per one cycle	ℓ_1:	mm
2) Cycle time	t_0:	s
(Fill in items 3) and 4) if required.)		
3) Acceleration time	t_a:	s
4) Deceleration time	t_d:	s
5) Stopping time	t_s:	s
6) Max. velocity	V:	mm/s
7) External force	F:	kg
8) Positioning accuracy of the work load	±	mm
9) Total weight of the work load and the table	W_A:	kg
10) Power supply voltage		V
11) Diameter of the ball screw		mm
12) Total length o the ball screw		mm
13) Lead of the ball screw		mm
14) Traveling		

	Motor side	Motor side
15) Diameter of the pulley	D_1: mm	D_2: mm
16) Weight of the pulley	W_1: kg	W_2: kg

(or item 17) and 18))

17) Width of the pulley	L_1:	mm
18) Material of the pulley		
19) Weight of the belt	W_M:	kg

Running pattern

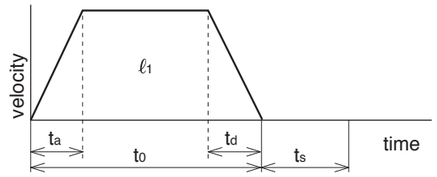

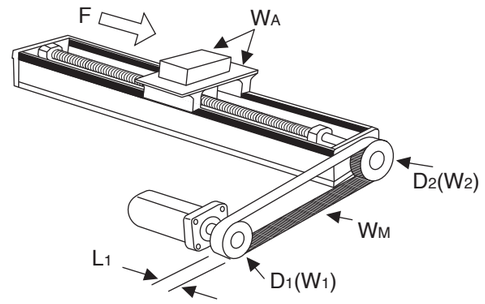

2. Other data

(Fill the details on specific mechanism and its configurations in the following blank.)

Company name :

Department/Section :

Name :

Address :

Tel :

Fax :

E-mail address:

Request for Motor Selection Ⅲ : Belt drive

1. Driven mechanism and running data

1) Travel distance of the work load per one cycle	ℓ_1:	mm
2) Cycle time	t_0:	s
(Fill in items 3) and 4) if required.)		
3) Acceleration time	t_a:	s
4) Deceleration time	t_d:	s
5) Stopping time	t_s:	s
6) Max. velocity	V:	mm/s
7) External force	F:	kg
8) Positioning accuracy of the work load	±	mm
9) Total weight of the work load	W_A:	kg
10) Power supply voltage		V
11) Weight of the belt	W_M:	kg
12) Diameter of the driving pulley	D_1:	mm
13) Total weight of the pulley	W_1:	kg

Running pattern

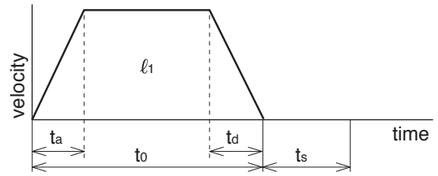

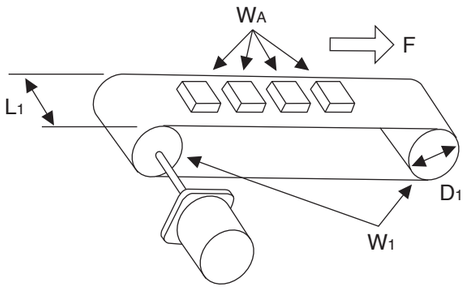

(or item 14) and 15))

14)Width of the pulley	L_1:	mm
15) Material of the pulley		
16) Traveling direction (horizontal, vertical etc.)		

2. Other data

(Fill the details on specific mechanism and its configurations in the following blank.)

Company name :
Department/Section :
Name :
Address :
Tel :
Fax :
E-mail address:

Request for Motor Selection Ⅳ : Timing pulley + Belt drive

1. Driven mechanism and running data

1) Travel distance of the work load per one cycle	ℓ_1:	mm
2) Cycle time	t_0:	s
(Fill in items 3) and 4) if required.)		
3) Acceleration time	t_a:	s
4) Deceleration time	t_d:	s
5) Stopping time	t_s:	s
6) Max. velocity	V:	mm/s
7) External force	F:	kg
8) Positioning accuracy of the work load	±	mm
9) Total weight of the work load and the table	W_A:	kg
10) Power supply voltage		V
11) Weight of motor site belt	W_M:	kg

	Motor side	Belt side
12) Diameter of the pully	D_1: mm	D_2: mm
13) Weight of the pulley	W_1: kg	W_2: kg

(or item 14) and 15))

14) Weight of the belt	L_1:	mm
15) Material of the pulley		

	Motor side	Belt side
16) Diameter of the pulley	D_3: mm	D_4: mm
17) Weight of the pulley	W_3: kg	W_4: kg

(or item 18) and 19))

18) Width of the pulley	L_2:	mm
19) Material of the pulley		
20) Weight of the belt	W_L:	kg
21) Traveling direction (horizontal, vertical etc.)		

Running pattern

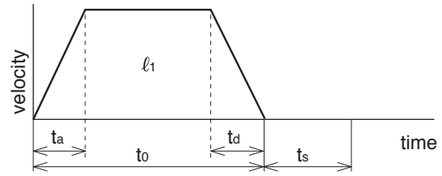

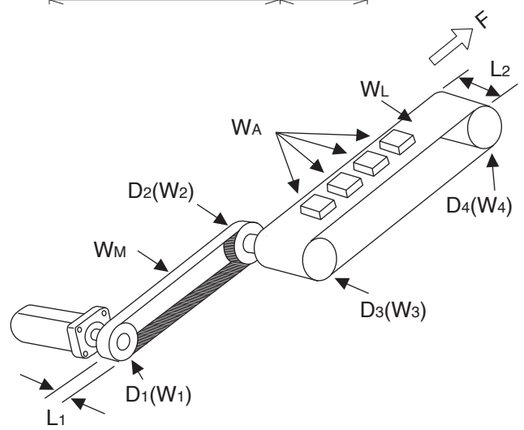

2. Other data

(Fill the details on specific mechanism and its configurations in the following blank.)

Company name :
Department/Section :
Name :
Address :
Tel :
Fax :
E-mail address:

Request for Motor Selection Ⅴ : Turntable drive

1. Driven mechanism and running data

1) Travel distance of the work load per one cycle	d_1:	deg
2) Cycle time	t_0:	s
(Fill in items 3) and 4) if required.)		
3) Acceleration time	t_a:	s
4) Deceleration time	t_d:	s
5) Stopping time	t_s:	s
6) Max. rotational speed of the table	v:	deg/s
(or)	V:	r/s
7) Positioning accuracy of the work load	±	deg
8) Weight of one work load	W_A:	kg
9) Driving radius of the center of gravity of the	R_1:	mm
10) Diameter of the table	D_1:	mm
11) Mass of the table	W_1:	kg
12) Diameter of the table support	T_1:	mm
13) Power supply voltage		V

	Prism		Cylinder	
14) Dimensions of the work load	a:	mm	a:	mm
	b:	mm	b:	mm
	c:	mm	c:	mm
15) Number of work loads		pcs		

Running pattern

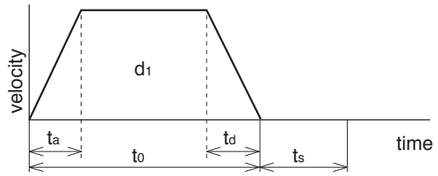

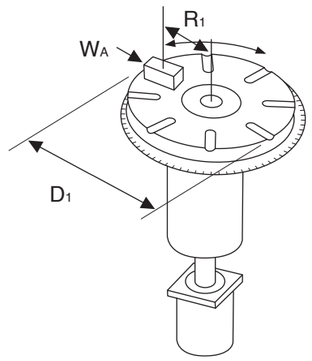

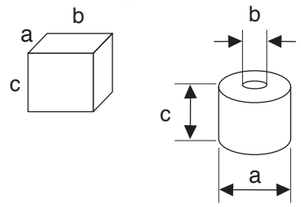

2. Other data

(Fill the details on specific mechanism and its configurations in the following blank.)

Company name :

Department/Section :

Name :

Address :

Tel :

Fax :

E-mail address:

Request for Motor Selection Ⅵ : Timing pulley + Turntable drive

1. Driven mechanism and running data

1) Travel distance of the work load per one cycle	d_1:	deg
2) Cycle time	t_0:	s
(Fill in items 3) and 4) if required.)		
3) Acceleration time	t_a:	s
4) Deceleration time	t_d:	s
5) Stopping time	t_s:	s
6) Max. rotating speed of the table	v:	deg/s
(or)	V:	r/s
7) Positioning accuracy of the work load	±	deg
8) Weight of one work load	W_A:	kg
9) Driving radius of the center of gravity of the	R_1:	mm
10) Diameter of the table	D_1:	mm
11) Mass of the table	W_1:	kg
12) Diameter of the table support	T_1:	mm
13) Power supply voltage		V

	(Prism)		(Cylinder)	
14) Dimension of the work load	a:	mm	a:	mm
	b:	mm	b:	mm
	c:	mm	c:	mm
15) Number of work loads		pcs		

	Motor side		Turntable side	
16) Diameter of the pulley	D_2:	mm	D_3:	mm
17) Weight of the pulley	W_2:	kg	W_3:	kg
(or item 18) and 19))				
18) Width of the pulley	L_1:	mm		
19) Material of the pulley				
20) Weight of the belt	W_M:	kg		

Running pattern

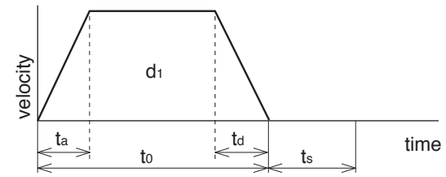

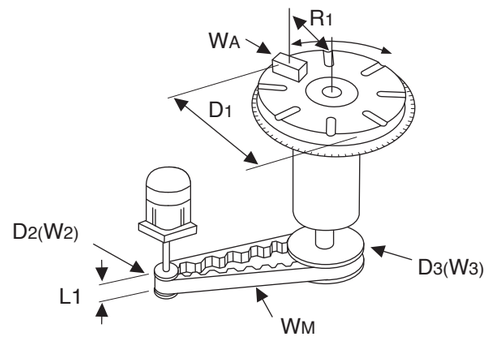

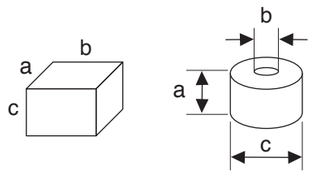

2. Other data

(Fill the details on specific mechanism and its configurations in the following blank.)

Company name :

Department/Section :

Name :

Address :

Tel :

Fax :

E-mail address:

Request for Motor Selection Ⅶ : Roller feed drive

1. Driven mechanism and running data

1) Travel distance of the work load per one cycle	ℓ_1:	mm
2) Cycle time	t_0:	s
(Fill in items 3) and 4) if required.)		
3) Acceleration time	t_a:	s
4) Deceleration time	t_d:	s
5) Stopping time	t_s:	s
6) Max. velocity	v:	mm/s
7) External pulling force	F:	kg
8) Positioning accuracy of the work load	±	mm
9) Total weight of the work load		pcs
10) Power supply voltage		V
11) Diameter of the roller	D_1:	mm
12) Mass of the roller	W_1:	kg

Running pattern

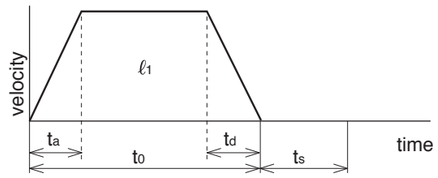

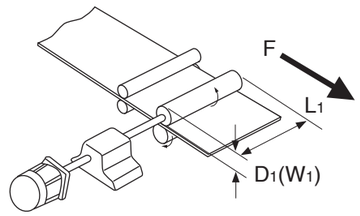

(or item 13) and 14))

13) Width of the roller	L_1:	mm
14) Material of the roller		

2. Other data

(Fill the details on specific mechanism and its configurations in the following blank.)

Company name :
Department/Section :
Name :
Address :
Tel :
Fax :
E-mail address:

Request for Motor Selection Ⅷ : Driving with Rack & Pinion

1. Driven mechanism and running data

1) Travel distance of the work load per one cycle	ℓ_1:	mm
2) Cycle time	t_0:	s
(Fill in items 3) and 4) if required.)		
3) Acceleration time	t_a:	s
4) Deceleration time	t_d:	s
5) Stopping time	t_s:	s
6) Max. velocity	V:	mm/s
7) External force	F:	kg
8) Positioning accuracy of the work load	±	mm
9) Total weight of the work load	W_A:	kg
10) Power supply voltage		V
11) Diameter of the pinion	D_3:	mm
12) Mass of the pinion	W_3:	kg
13) Traveling direction (horizontal, vertical, etc)		

Running pattern

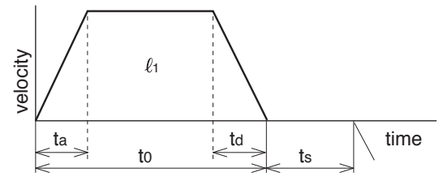

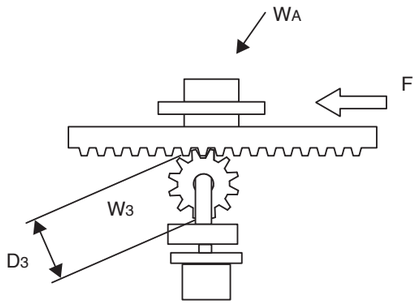

2. Other data

(Fill the details on specific mechanism and its configurations in the following blank.)

Company name :
Department/Section :
Name :
Address :
Tel :
Fax :
E-mail address:

Connection between MINAS A5 and FP2-PP22 AFP2434 (Panasonic Electric Works)

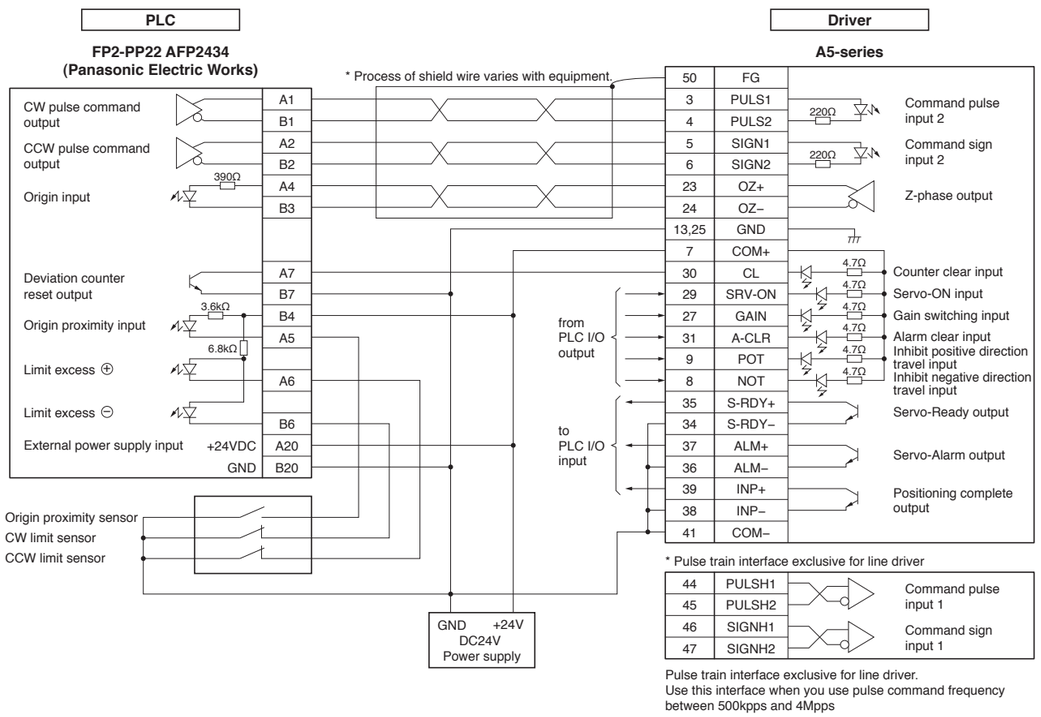

Connection between MINAS A5 and FP2-PP22 AFP2434 (Panasonic Electric Works)

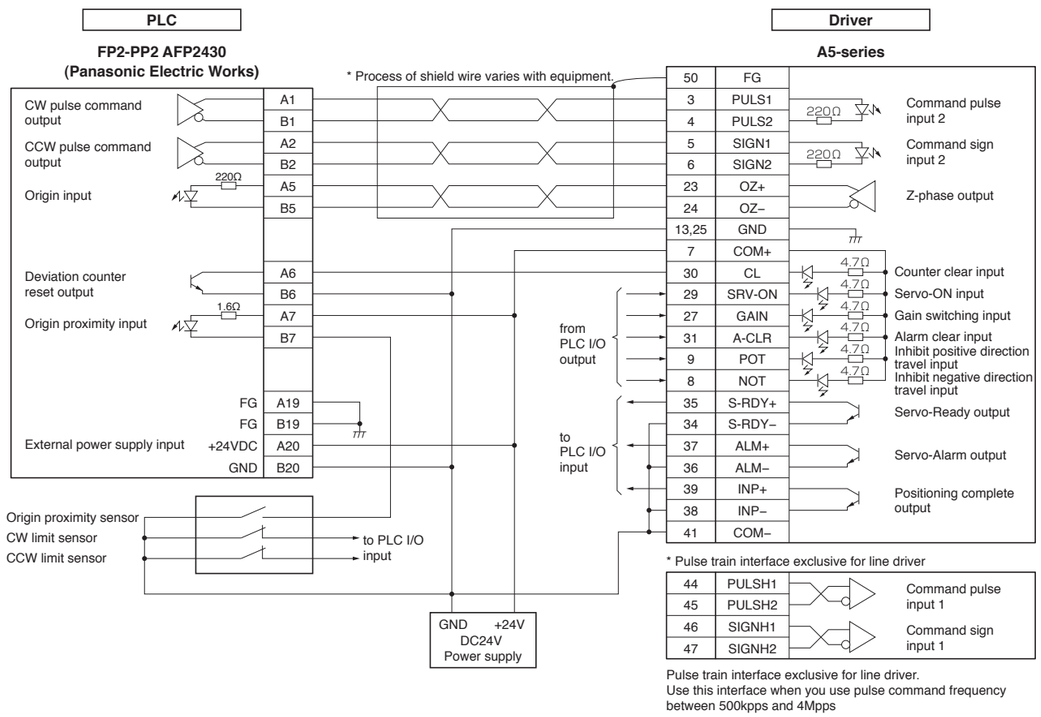

Connection between MINAS A5 and FPG-PP12 AFPG432 (Panasonic Electric Works)

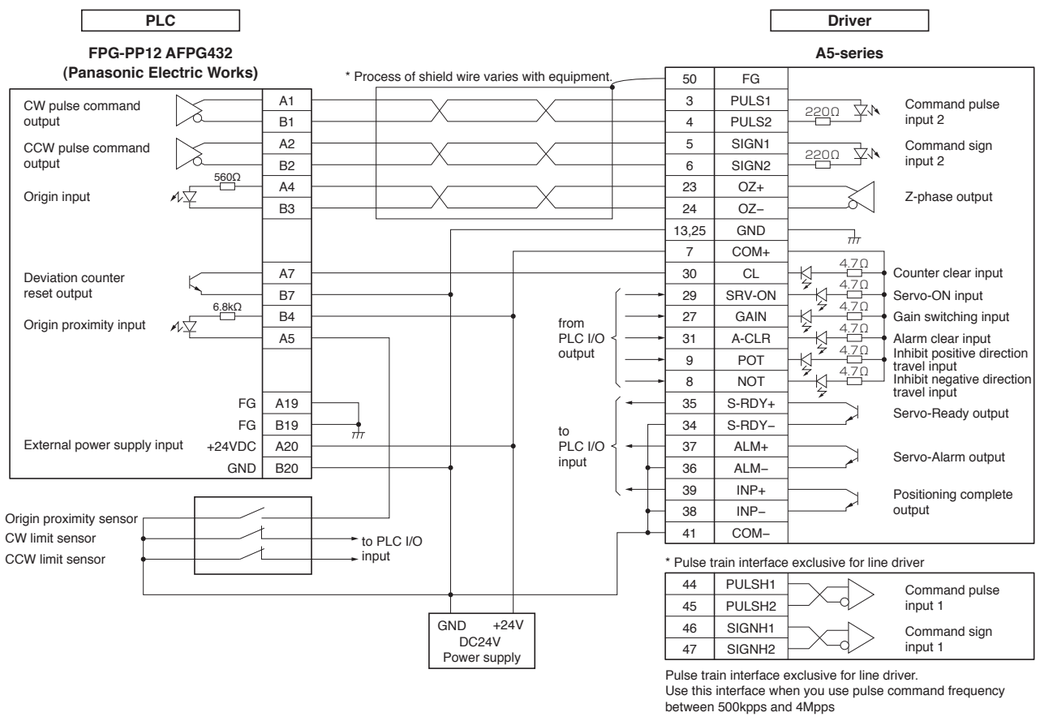

Connection between MINAS A5 and FPG-C32T (Panasonic Electric Works)

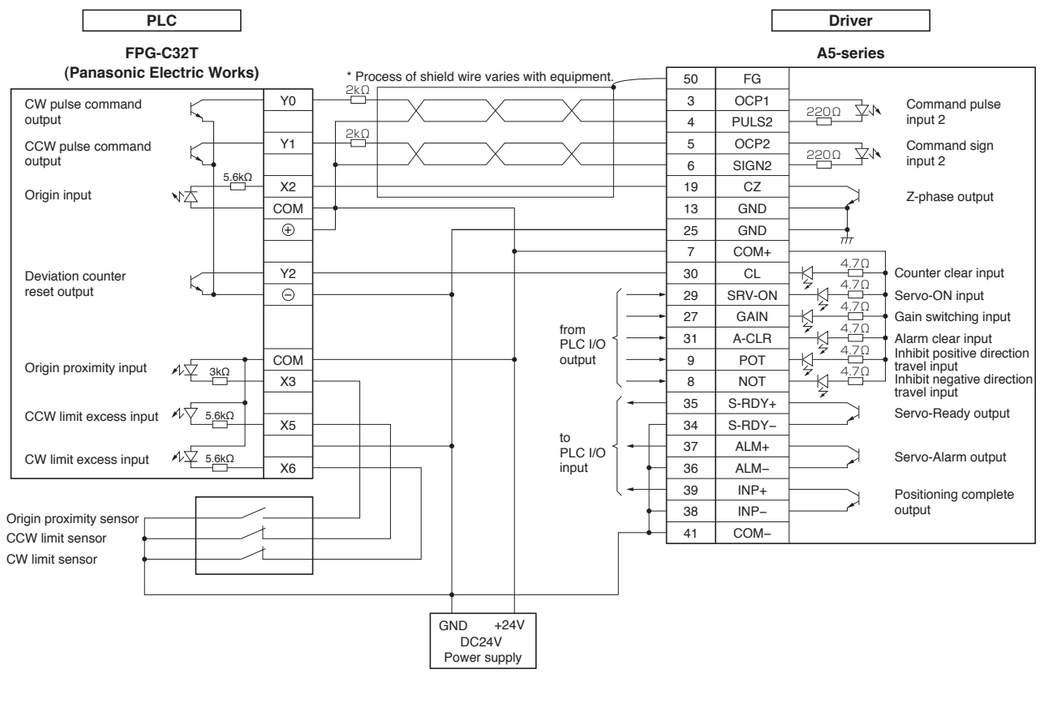

Connection between MINAS A5 and F3YP14-ON/F3YP18-ON (Yokogawa Electric Corp.)

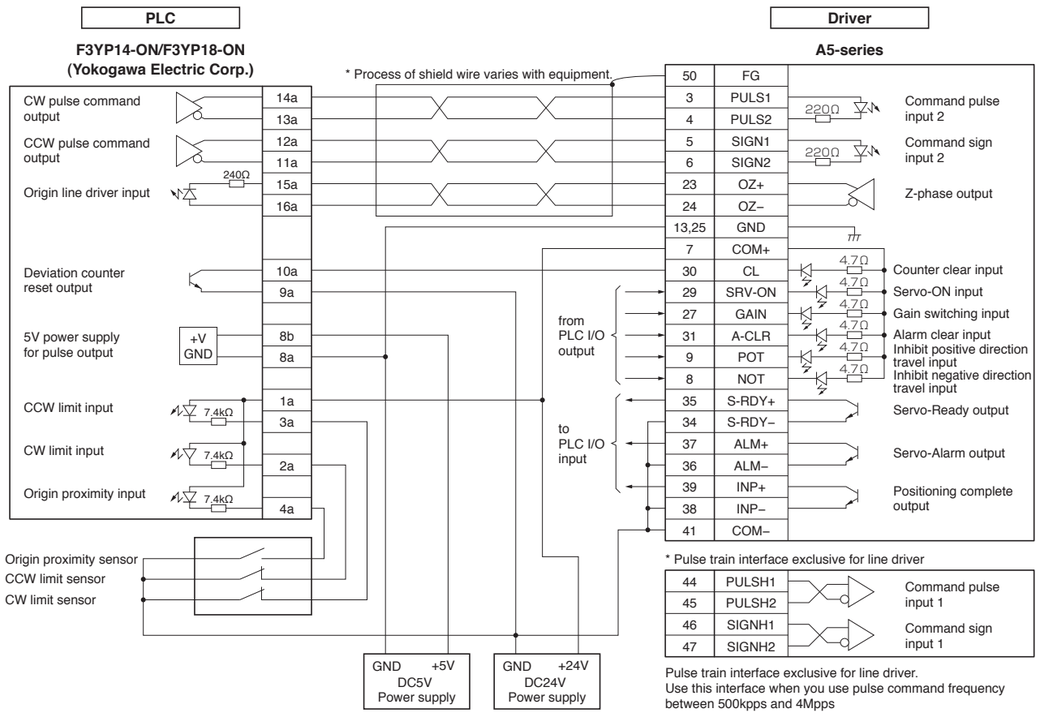

Connection between MINAS A5 and CJ1W-NC113 (Omron Corp.)

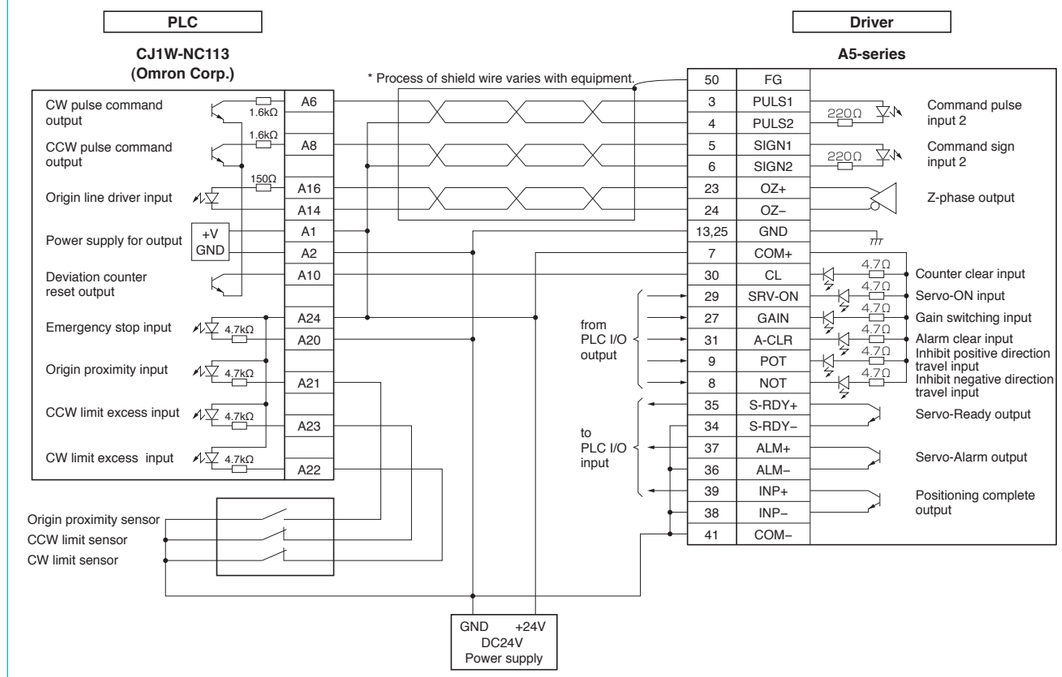

Connection between MINAS A5 and F3NC32-ON/F3NC34-ON (Yokogawa Electric Corp.)

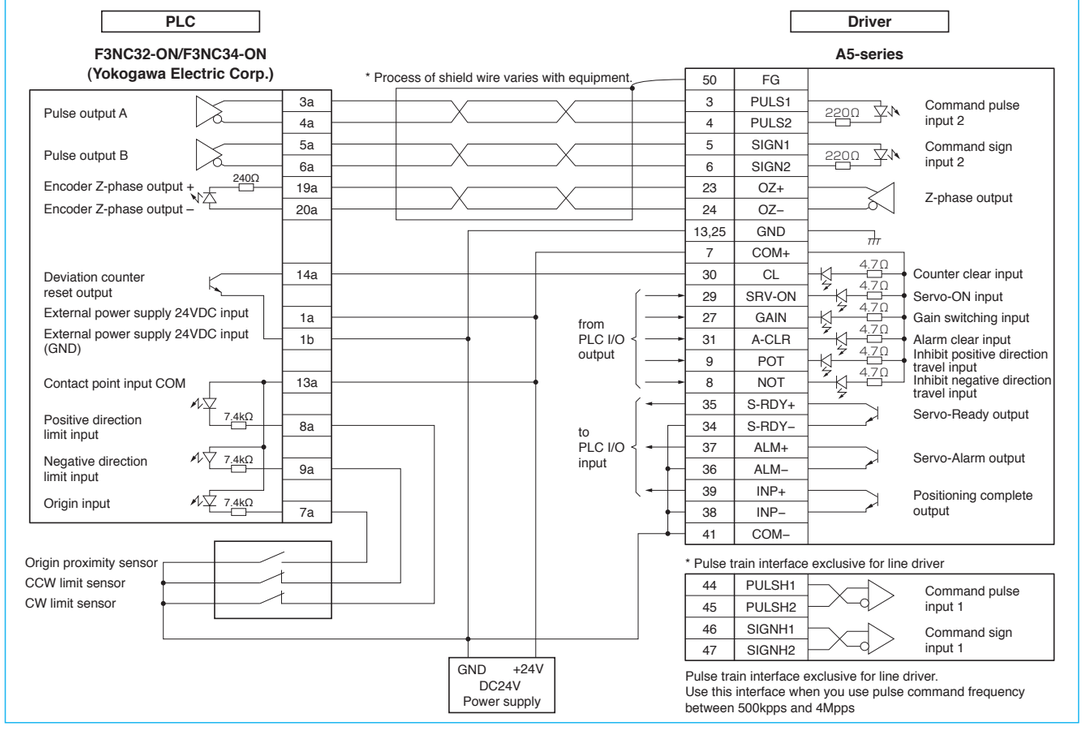

Connection between MINAS A5 and CJ1W-NC133 (Omron Corp.)

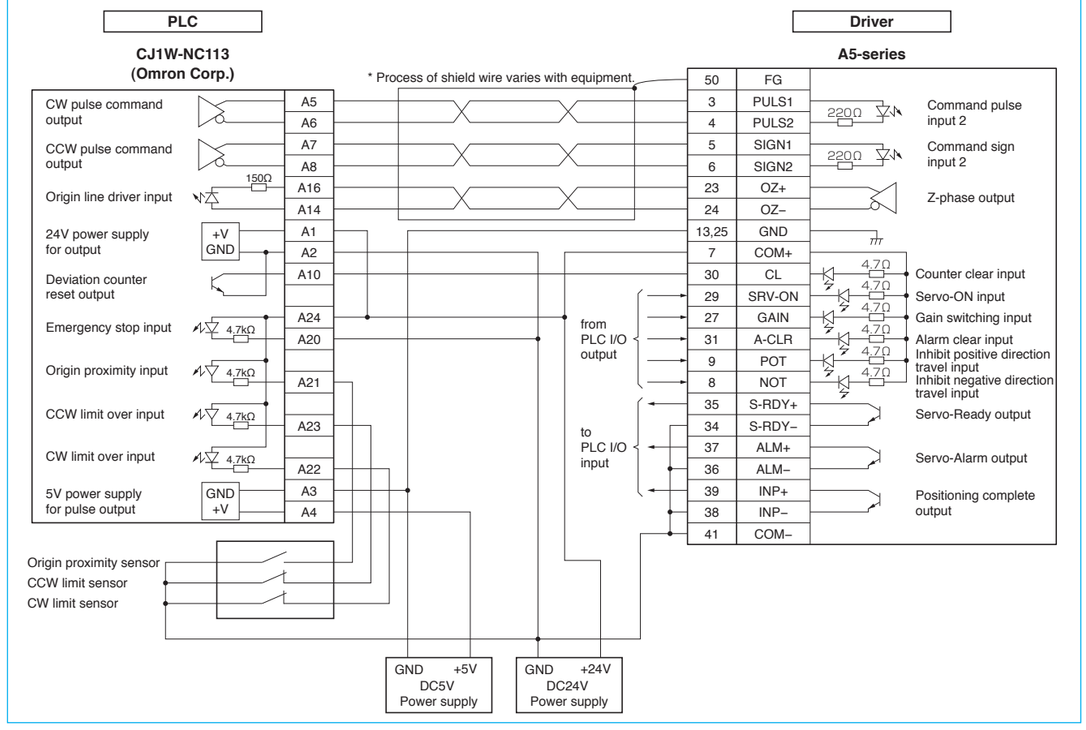

Connection between MINAS A5 and QD75D1 (Mitsubishi Electric Corp.)

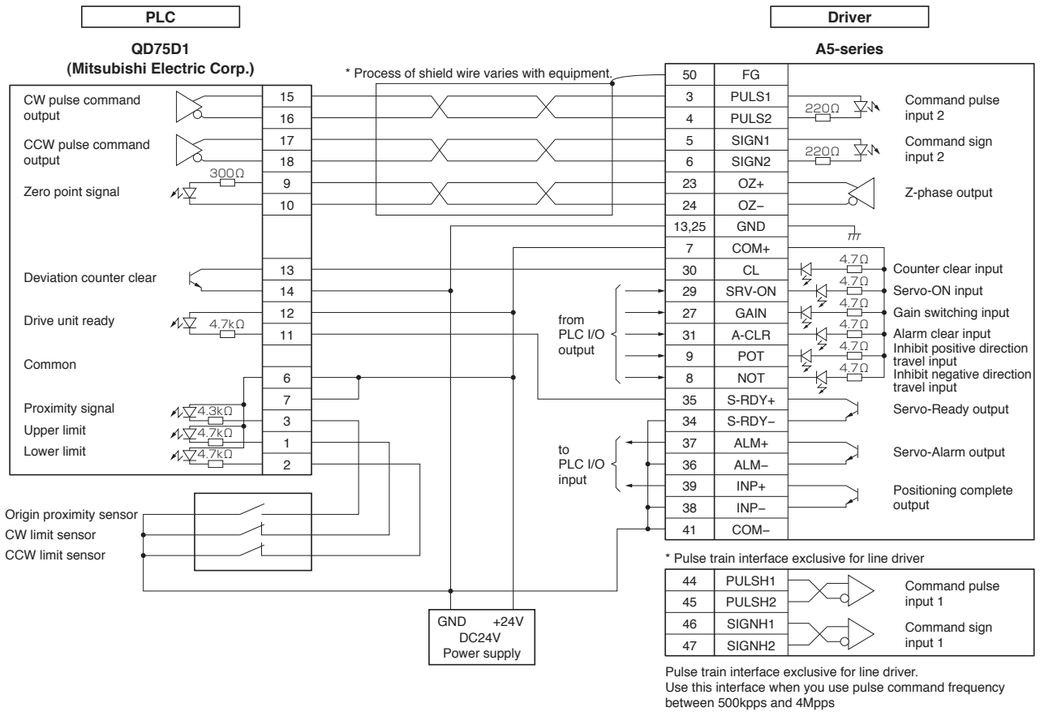

Connection between MINAS A5 and KV-5000/3000 (keyence Corp.)

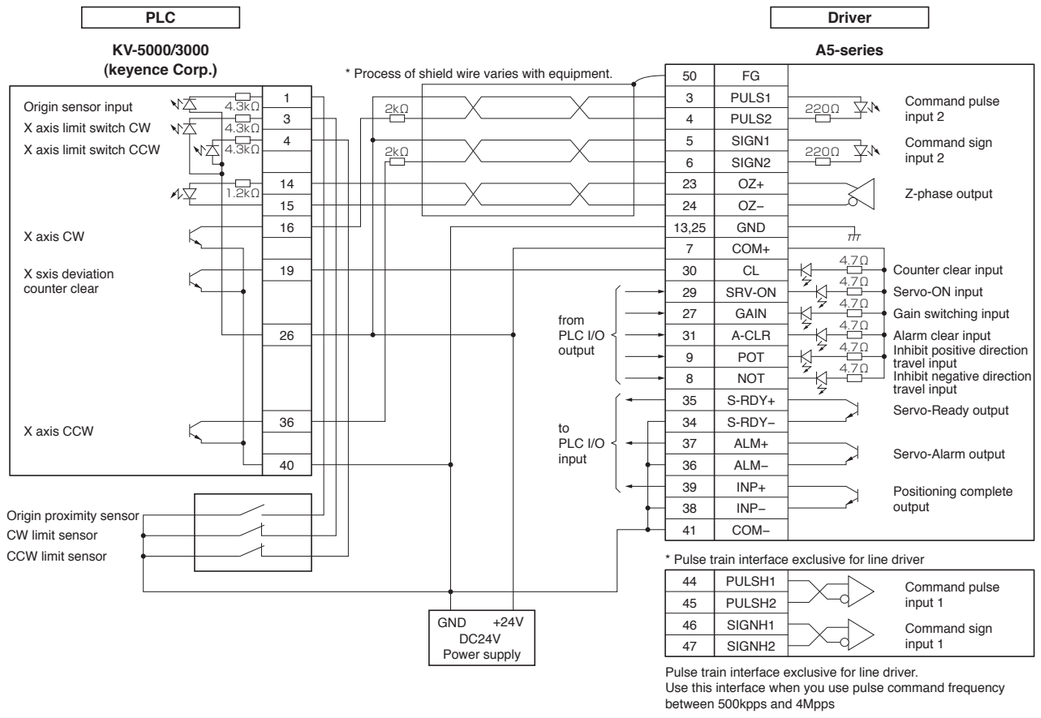

DV0P

Part No.	Title	Page
DV0P1450	Surge absorber (3-phase)	109
DV0P1460	Noise Filter for Signal Lines	109
DV0P220	Reactor	127
DV0P221	Reactor	127
DV0P222	Reactor	127
DV0P223	Reactor	127
DV0P224	Reactor	127
DV0P225	Reactor	127
DV0P227	Reactor	127
DV0P228	Reactor	127
DV0P2990	Battery For Absolute Encoder	125
DV0P3410	Noise Filter	108
DV0P4170	Noise Filter	108
DV0P4190	Surge absorber (Single phase)	109
DV0P4220	Noise Filter	108
DV0P4280	External Regenerative Resistor: 50Ω 25W	128
DV0P4281	External Regenerative Resistor: 100Ω 25W	128
DV0P4282	External Regenerative Resistor: 25Ω 50W	128
DV0P4283	External Regenerative Resistor: 50Ω 50W	128
DV0P4284	External Regenerative Resistor: 30Ω100W	128
DV0P4285	External Regenerative Resistor: 20Ω130W	128
DV0P4290	Connector Kit for Motor/Encoder Connection	122
DV0P4350	Interface Connector	118
DV0P4360	Interface cable	118
DV0P4380	Connector Kit for Motor/Encoder Connection	122
DV0P4430	Battery Box	125
DV0PM20010	Connector Kit: Encoder	119
DV0PM20021	Operation manual (Japanese)	–
DV0PM20022	Operation manual (English)	–
DV0PM20023	Operation manual (Chinese (simplified))	–
DV0PM20024	Connector Kit: RS485, 232	119
DV0PM20025	Connector Kit: Safety	119
DV0PM20026	Connector Kit: External Scale	119
DV0PM20027	Mounting bracket: A-frame	126
DV0PM20028	Mounting bracket: B-frame	126
DV0PM20029	Mounting bracket: C-frame	126
DV0PM20030	Mounting bracket: D-frame	126
DV0PM20031	Connector Kit: Analog Monitor Signal	120
DV0PM20032	Connector for Power Supply Input Connection (A to D-frame (Single row type))	120
DV0PM20033	Connector for Power Supply Input Connection (A to D-frame (Double row type))	120
DV0PM20034	Connector for Motor Connection (A to D-frame)	121
DV0PM20035	Connector Kit for Motor/Encoder Connection	123
DV0PM20036	Connector Kit for Motor/Encoder Connection	123
DV0PM20037	Connector Kit for Motor/Encoder Connection	123
DV0PM20038	Connector Kit for Motor/Encoder Connection	123
DV0PM20039	Connector Kit for Motor/Encoder Connection	124
DV0PM20040	Connector Kit for Motor/Brake Connection	124
DV0PM20042	Noise Filter	108
DV0PM20043	Noise Filter	108
DV0PM20044	Connector for Power Supply Input Connection (E-frame)	120
DV0PM20045	Connector for Regenerative Resistor (E-frame 200V/400V 共用)	121
DV0PM20046	Connector for Motor Connection (E-frame 200V/400V 共用)	122
DV0PM20048	External Regenerative Resistor: 120Ω 240W	128
DV0PM20049	External Regenerative Resistor: 80Ω 450W	128
DV0PM20050	Surge absorber	109
DV0PM20051	Connector for Power Supply Input Connection (D-frame 400V)	121
DV0PM20052	Connector for Power Supply Input Connection (E-frame 400V)	121
DV0PM20053	Connector for Control Power Supply Input Connection (D,E-frame 400V)	121
DV0PM20054	Connector for Motor Connection (D-frame 400V)	122
DV0PM20055	Connector for Regenerative Resistor (D-frame 400V)	121

MADHT

Part No.	Title	Page
MADHT1105	A5 series Driver: A-frame	18/30
MADHT1107	A5 series Driver: A-frame	18/30
MADHT1505	A5 series Driver: A-frame	18/30
MADHT1507	A5 series Driver: A-frame	18/30
MADHT1105E	A5E series Driver: A-frame	20/30
MADHT1107E	A5E series Driver: A-frame	20/30
MADHT1505E	A5E series Driver: A-frame	20/30
MADHT1507E	A5E series Driver: A-frame	20/30

MBDHT

Part No.	Title	Page
MBDHT2110	A5 series Driver: B-frame	18/30
MBDHT2510	A5 series Driver: B-frame	18/30
MBDHT2110E	A5E series Driver: B-frame	20/30
MBDHT2510E	A5E series Driver: B-frame	20/30

MCDHT

Part No.	Title	Page
MCDHT3120	A5 series Driver: C-frame	18/31
MCDHT3520	A5 series Driver: C-frame	18/31
MCDHT3120E	A5E series Driver: C-frame	20/31
MCDHT3520E	A5E series Driver: C-frame	20/31

MDDHT

Part No.	Title	Page
MDDHT3530	A5 series Driver: D-frame	18/32
MDDHT5540	A5 series Driver: D-frame	18/32
MDDHT3530E	A5E series Driver: D-frame	20/32
MDDHT5540E	A5E series Driver: D-frame	20/32

MDME (Middle inertia)

Part No.	Title	Page
MDME102G1C	MDME 1.0kW Incremental encoder	51
MDME102G1D	MDME 1.0kW Incremental encoder	51
MDME102G1G	MDME 1.0kW Incremental encoder	51
MDME102G1H	MDME 1.0kW Incremental encoder	51
MDME102S1C	MDME 1.0kW Incremental encoder	51
MDME102S1D	MDME 1.0kW Incremental encoder	51
MDME102S1G	MDME 1.0kW Incremental encoder	51
MDME102S1H	MDME 1.0kW Incremental encoder	51
MDME104G1C	MDME 1.0kW Incremental encoder	88
MDME104G1D	MDME 1.0kW Incremental encoder	88
MDME104G1G	MDME 1.0kW Incremental encoder	88
MDME104G1H	MDME 1.0kW Incremental encoder	88
MDME104S1C	MDME 1.0kW Absolute encoder	88
MDME104S1D	MDME 1.0kW Absolute encoder	88
MDME104S1G	MDME 1.0kW Absolute encoder	88
MDME104S1H	MDME 1.0kW Absolute encoder	88
MDME152G1C	MDME 1.5kW Incremental encoder	52
MDME152G1D	MDME 1.5kW Incremental encoder	52
MDME152G1G	MDME 1.5kW Incremental encoder	52
MDME152G1H	MDME 1.5kW Incremental encoder	52
MDME152S1C	MDME 1.5kW Absolute encoder	52
MDME152S1D	MDME 1.5kW Absolute encoder	52
MDME152S1G	MDME 1.5kW Absolute encoder	52
MDME152S1H	MDME 1.5kW Absolute encoder	52
MDME154G1C	MDME 1.5kW Incremental encoder	89
MDME154G1D	MDME 1.5kW Incremental encoder	89
MDME154G1G	MDME 1.5kW Incremental encoder	89
MDME154G1H	MDME 1.5kW Incremental encoder	89
MDME154S1C	MDME 1.5kW Absolute encoder	89
MDME154S1D	MDME 1.5kW Absolute encoder	89
MDME154S1G	MDME 1.5kW Absolute encoder	89
MDME154S1H	MDME 1.5kW Absolute encoder	89
MDME202G1C	MDME 2.0kW Incremental encoder	53
MDME202G1D	MDME 2.0kW Incremental encoder	53
MDME202G1G	MDME 2.0kW Incremental encoder	53

Index (Alphabetical order)

MDME (Middle inertia)

Part No.	Title	Page
MDME202G1H	MDME 2.0kW Incremental encoder	53
MDME202S1C	MDME 2.0kW Absolute encoder	53
MDME202S1D	MDME 2.0kW Absolute encoder	53
MDME202S1G	MDME 2.0kW Absolute encoder	53
MDME202S1H	MDME 2.0kW Absolute encoder	53
MDME204G1C	MDME 2.0kW Incremental encoder	90
MDME204G1D	MDME 2.0kW Incremental encoder	90
MDME204G1G	MDME 2.0kW Incremental encoder	90
MDME204G1H	MDME 2.0kW Incremental encoder	90
MDME204S1C	MDME 2.0kW Absolute encoder	90
MDME204S1D	MDME 2.0kW Absolute encoder	90
MDME204S1G	MDME 2.0kW Absolute encoder	90
MDME204S1H	MDME 2.0kW Absolute encoder	90
MDME302G1C	MDME 3.0kW Incremental encoder	54
MDME302G1D	MDME 3.0kW Incremental encoder	54
MDME302G1G	MDME 3.0kW Incremental encoder	54
MDME302G1H	MDME 3.0kW Incremental encoder	54
MDME302S1C	MDME 3.0kW Absolute encoder	54
MDME302S1D	MDME 3.0kW Absolute encoder	54
MDME302S1G	MDME 3.0kW Absolute encoder	54
MDME302S1H	MDME 3.0kW Absolute encoder	54
MDME304G1C	MDME 3.0kW Incremental encoder	91
MDME304G1D	MDME 3.0kW Incremental encoder	91
MDME304G1G	MDME 3.0kW Incremental encoder	91
MDME304G1H	MDME 3.0kW Incremental encoder	91
MDME304S1C	MDME 3.0kW Absolute encoder	91
MDME304S1D	MDME 3.0kW Absolute encoder	91
MDME304S1G	MDME 3.0kW Absolute encoder	91
MDME304S1H	MDME 3.0kW Absolute encoder	91
MDME402G1C	MDME 4.0kW Incremental encoder	55
MDME402G1D	MDME 4.0kW Incremental encoder	55
MDME402G1G	MDME 4.0kW Incremental encoder	55
MDME402G1H	MDME 4.0kW Incremental encoder	55
MDME402S1C	MDME 4.0kW Absolute encoder	55
MDME402S1D	MDME 4.0kW Absolute encoder	55
MDME402S1G	MDME 4.0kW Absolute encoder	55
MDME402S1H	MDME 4.0kW Absolute encoder	55
MDME404G1C	MDME 4.0kW Incremental encoder	92
MDME404G1D	MDME 4.0kW Incremental encoder	92
MDME404G1G	MDME 4.0kW Incremental encoder	92
MDME404G1H	MDME 4.0kW Incremental encoder	92
MDME404S1C	MDME 4.0kW Absolute encoder	92
MDME404S1D	MDME 4.0kW Absolute encoder	92
MDME404S1G	MDME 4.0kW Absolute encoder	92
MDME404S1H	MDME 4.0kW Absolute encoder	92
MDME502G1C	MDME 5.0kW Incremental encoder	56
MDME502G1D	MDME 5.0kW Incremental encoder	56
MDME502G1G	MDME 5.0kW Incremental encoder	56
MDME502G1H	MDME 5.0kW Incremental encoder	56
MDME502S1C	MDME 5.0kW Absolute encoder	56
MDME502S1D	MDME 5.0kW Absolute encoder	56
MDME502S1G	MDME 5.0kW Absolute encoder	56
MDME502S1H	MDME 5.0kW Absolute encoder	56
MDME504G1C	MDME 5.0kW Incremental encoder	93
MDME504G1D	MDME 5.0kW Incremental encoder	93
MDME504G1G	MDME 5.0kW Incremental encoder	93
MDME504G1H	MDME 5.0kW Incremental encoder	93
MDME504S1C	MDME 5.0kW Absolute encoder	93
MDME504S1D	MDME 5.0kW Absolute encoder	93
MDME504S1G	MDME 5.0kW Absolute encoder	93
MDME504S1H	MDME 5.0kW Absolute encoder	93

MEDHT

Part No.	Title	Page
MEDHT7364	A5 series Driver: E-frame	18/32
MEDHT7364E	A5E series Driver: E-frame	20/32

MFDHT

Part No.	Title	Page
MFDHTA390	A5 series Driver: F-frame	18/34
MFDHTB3A2	A5 series Driver: F-frame	18/34
MFDHTA390E	A5E series Driver: F-frame	20/34
MFDHTB3A2E	A5E series Driver: F-frame	20/34

MFECA

Part No.	Title	Page
MFECA0030EAE	Encoder Cable (with Buttery Box)	112
MFECA0030EAM	Encoder Cable (without Buttery Box)	112
MFECA0030ETD	Encoder Cable (without Buttery Box)	113
MFECA0030ETE	Encoder Cable (with Buttery Box)	113
MFECA0030MJD	Encoder Cable (without Buttery Box)	112
MFECA0030MJE	Encoder Cable (with Buttery Box)	113
MFECA0050EAE	Encoder Cable (with Buttery Box)	112
MFECA0050EAM	Encoder Cable (without Buttery Box)	112
MFECA0050ETD	Encoder Cable (without Buttery Box)	113
MFECA0050ETE	Encoder Cable (with Buttery Box)	113
MFECA0050MJD	Encoder Cable (without Buttery Box)	112
MFECA0050MJE	Encoder Cable (with Buttery Box)	113
MFECA0100EAE	Encoder Cable (with Buttery Box)	112
MFECA0100EAM	Encoder Cable (without Buttery Box)	112
MFECA0100ETD	Encoder Cable (without Buttery Box)	113
MFECA0100ETE	Encoder Cable (with Buttery Box)	113
MFECA0100MJD	Encoder Cable (without Buttery Box)	112
MFECA0100MJE	Encoder Cable (with Buttery Box)	113
MFECA0200EAE	Encoder Cable (with Buttery Box)	112
MFECA0200EAM	Encoder Cable (without Buttery Box)	112
MFECA0200ETD	Encoder Cable (without Buttery Box)	113
MFECA0200ETE	Encoder Cable (with Buttery Box)	113
MFECA0200MJD	Encoder Cable (without Buttery Box)	112
MFECA0200MJE	Encoder Cable (with Buttery Box)	113

MFMCA

Part No.	Title	Page
MFMCA0030EED	Motor Cable (without Brake)	114
MFMCA0030NJD	Motor Cable (without Brake)	114
MFMCA0032FCD	Motor Cable (with Brake)	116
MFMCA0033ECT	Motor Cable (without Brake)	115
MFMCA0033FCT	Motor Cable (with Brake)	116
MFMCA0050EED	Motor Cable (without Brake)	114
MFMCA0050NJD	Motor Cable (without Brake)	114
MFMCA0052FCD	Motor Cable (with Brake)	116
MFMCA0053ECT	Motor Cable (without Brake)	115
MFMCA0053FCT	Motor Cable (with Brake)	116
MFMCA0100EED	Motor Cable (without Brake)	114
MFMCA0100NJD	Motor Cable (without Brake)	114
MFMCA0102FCD	Motor Cable (with Brake)	116
MFMCA0103ECT	Motor Cable (without Brake)	115
MFMCA0103FCT	Motor Cable (with Brake)	116
MFMCA0200EED	Motor Cable (without Brake)	114
MFMCA0200NJD	Motor Cable (without Brake)	114
MFMCA0202FCD	Motor Cable (with Brake)	116
MFMCA0203ECT	Motor Cable (without Brake)	115
MFMCA0203FCT	Motor Cable (with Brake)	116

MFMCB

Part No.	Title	Page
MFMCB0030GET	Brake Cable	117
MFMCB0030PJT	Brake Cable	117
MFMCB0050GET	Brake Cable	117
MFMCB0050PJT	Brake Cable	117
MFMCB0100GET	Brake Cable	117
MFMCB0100PJT	Brake Cable	117
MFMCB0200GET	Brake Cable	117
MFMCB0200PJT	Brake Cable	117

MFMCD

Part No.	Title	Page
MFMCD0032ECD	Motor Cable (without Brake)	114
MFMCD0052ECD	Motor Cable (without Brake)	114
MFMCD0102ECD	Motor Cable (without Brake)	114
MFMCD0202ECD	Motor Cable (without Brake)	114

MFMCE

Part No.	Title	Page
MFMCE0032ECD	Motor Cable (without Brake)	115
MFMCE0032FCD	Motor Cable (with Brake)	116
MFMCE0052ECD	Motor Cable (without Brake)	115
MFMCE0052FCD	Motor Cable (with Brake)	116
MFMCE0102ECD	Motor Cable (without Brake)	115
MFMCE0102FCD	Motor Cable (with Brake)	116
MFMCE0202ECD	Motor Cable (without Brake)	115
MFMCE0202FCD	Motor Cable (with Brake)	116

MGME (Middle inertia: Low speed/ High torque type)

Part No.	Title	Page
MGME092G1C	MGME 0.9kW Incremental encoder	57
MGME092G1D	MGME 0.9kW Incremental encoder	57
MGME092G1G	MGME 0.9kW Incremental encoder	57
MGME092G1H	MGME 0.9kW Incremental encoder	57
MGME092S1C	MGME 0.9kW Absolute encoder	57
MGME092S1D	MGME 0.9kW Absolute encoder	57
MGME092S1G	MGME 0.9kW Absolute encoder	57
MGME092S1H	MGME 0.9kW Absolute encoder	57
MGME094G1C	MGME 0.9kW Incremental encoder	94
MGME094G1D	MGME 0.9kW Incremental encoder	94
MGME094G1G	MGME 0.9kW Incremental encoder	94
MGME094G1H	MGME 0.9kW Incremental encoder	94
MGME094S1C	MGME 0.9kW Absolute encoder	94
MGME094S1D	MGME 0.9kW Absolute encoder	94
MGME094S1G	MGME 0.9kW Absolute encoder	94
MGME094S1H	MGME 0.9kW Absolute encoder	94
MGME202G1C	MGME 2.0kW Incremental encoder	58
MGME202G1D	MGME 2.0kW Incremental encoder	58
MGME202G1G	MGME 2.0kW Incremental encoder	58
MGME202G1H	MGME 2.0kW Incremental encoder	58
MGME202S1C	MGME 2.0kW Absolute encoder	58
MGME202S1D	MGME 2.0kW Absolute encoder	58
MGME202S1G	MGME 2.0kW Absolute encoder	58
MGME202S1H	MGME 2.0kW Absolute encoder	58
MGME204G1C	MGME 2.0kW Incremental encoder	95
MGME204G1D	MGME 2.0kW Incremental encoder	95
MGME204G1G	MGME 2.0kW Incremental encoder	95
MGME204G1H	MGME 2.0kW Incremental encoder	95
MGME204S1C	MGME 2.0kW Absolute encoder	95
MGME204S1D	MGME 2.0kW Absolute encoder	95
MGME204S1G	MGME 2.0kW Absolute encoder	95
MGME204S1H	MGME 2.0kW Absolute encoder	95
MGME302G1C	MGME 3.0kW Incremental encoder	59
MGME302G1D	MGME 3.0kW Incremental encoder	59
MGME302G1G	MGME 3.0kW Incremental encoder	59
MGME302G1H	MGME 3.0kW Incremental encoder	59
MGME302S1C	MGME 3.0kW Absolute encoder	59
MGME302S1D	MGME 3.0kW Absolute encoder	59
MGME302S1G	MGME 3.0kW Absolute encoder	59
MGME302S1H	MGME 3.0kW Absolute encoder	59
MGME304G1C	MGME 3.0kW Incremental encoder	96
MGME304G1D	MGME 3.0kW Incremental encoder	96
MGME304G1G	MGME 3.0kW Incremental encoder	96
MGME304G1H	MGME 3.0kW Incremental encoder	96
MGME304S1C	MGME 3.0kW Absolute encoder	96
MGME304S1D	MGME 3.0kW Absolute encoder	96
MGME304S1G	MGME 3.0kW Absolute encoder	96
MGME304S1H	MGME 3.0kW Absolute encoder	96

MHMD (High inertia)

Part No.	Title	Page
MHMD021G1A	MHMD 200W Incremental encoder	76
MHMD021G1B	MHMD 200W Incremental encoder	76
MHMD021G1C	MHMD 200W Incremental encoder	76
MHMD021G1D	MHMD 200W Incremental encoder	76
MHMD021G1S	MHMD 200W Incremental encoder	76
MHMD021G1T	MHMD 200W Incremental encoder	76
MHMD021G1U	MHMD 200W Incremental encoder	76
MHMD021G1V	MHMD 200W Incremental encoder	76
MHMD021S1A	MHMD 200W Absolute encoder	76
MHMD021S1B	MHMD 200W Absolute encoder	76
MHMD021S1C	MHMD 200W Absolute encoder	76
MHMD021S1D	MHMD 200W Absolute encoder	76
MHMD021S1S	MHMD 200W Absolute encoder	76
MHMD021S1T	MHMD 200W Absolute encoder	76
MHMD021S1U	MHMD 200W Absolute encoder	76
MHMD021S1V	MHMD 200W Absolute encoder	76
MHMD022G1A	MHMD 200W Incremental encoder	77
MHMD022G1B	MHMD 200W Incremental encoder	77
MHMD022G1C	MHMD 200W Incremental encoder	77
MHMD022G1D	MHMD 200W Incremental encoder	77
MHMD022G1S	MHMD 200W Incremental encoder	77
MHMD022G1T	MHMD 200W Incremental encoder	77
MHMD022G1U	MHMD 200W Incremental encoder	77
MHMD022G1V	MHMD 200W Incremental encoder	77
MHMD022S1A	MHMD 200W Absolute encoder	77
MHMD022S1B	MHMD 200W Absolute encoder	77
MHMD022S1C	MHMD 200W Absolute encoder	77
MHMD022S1D	MHMD 200W Absolute encoder	77
MHMD022S1S	MHMD 200W Absolute encoder	77
MHMD022S1T	MHMD 200W Absolute encoder	77
MHMD022S1U	MHMD 200W Absolute encoder	77
MHMD022S1V	MHMD 200W Absolute encoder	77
MHMD041G1A	MHMD 400W Incremental encoder	78
MHMD041G1B	MHMD 400W Incremental encoder	78
MHMD041G1C	MHMD 400W Incremental encoder	78
MHMD041G1D	MHMD 400W Incremental encoder	78
MHMD041G1S	MHMD 400W Incremental encoder	78
MHMD041G1T	MHMD 400W Incremental encoder	78
MHMD041G1U	MHMD 400W Incremental encoder	78
MHMD041G1V	MHMD 400W Incremental encoder	78
MHMD041S1A	MHMD 400W Absolute encoder	78
MHMD041S1B	MHMD 400W Absolute encoder	78
MHMD041S1C	MHMD 400W Absolute encoder	78
MHMD041S1D	MHMD 400W Absolute encoder	78
MHMD041S1S	MHMD 400W Absolute encoder	78
MHMD041S1T	MHMD 400W Absolute encoder	78
MHMD041S1U	MHMD 400W Absolute encoder	78
MHMD041S1V	MHMD 400W Absolute encoder	78
MHMD042G1A	MHMD 400W Incremental encoder	79
MHMD042G1B	MHMD 400W Incremental encoder	79
MHMD042G1C	MHMD 400W Incremental encoder	79
MHMD042G1D	MHMD 400W Incremental encoder	79
MHMD042G1S	MHMD 400W Incremental encoder	79
MHMD042G1T	MHMD 400W Incremental encoder	79
MHMD042G1U	MHMD 400W Incremental encoder	79
MHMD042G1V	MHMD 400W Incremental encoder	79
MHMD042S1A	MHMD 400W Absolute encoder	79
MHMD042S1B	MHMD 400W Absolute encoder	79
MHMD042S1C	MHMD 400W Absolute encoder	79
MHMD042S1D	MHMD 400W Absolute encoder	79
MHMD042S1S	MHMD 400W Absolute encoder	79
MHMD042S1T	MHMD 400W Absolute encoder	79
MHMD042S1U	MHMD 400W Absolute encoder	79
MHMD042S1V	MHMD 400W Absolute encoder	79
MHMD082G1A	MHMD 750W Incremental encoder	80
MHMD082G1B	MHMD 750W Incremental encoder	80
MHMD082G1C	MHMD 750W Incremental encoder	80

Index (Alphabetical order)

MHMD (High inertia)

Part No.	Title	Page
MHMD082G1D	MHMD 750W Incremental encoder	80
MHMD082G1S	MHMD 750W Incremental encoder	80
MHMD082G1T	MHMD 750W Incremental encoder	80
MHMD082G1U	MHMD 750W Incremental encoder	80
MHMD082G1V	MHMD 750W Incremental encoder	80
MHMD082S1A	MHMD 750W Absolute encoder	80
MHMD082S1B	MHMD 750W Absolute encoder	80
MHMD082S1C	MHMD 750W Absolute encoder	80
MHMD082S1D	MHMD 750W Absolute encoder	80
MHMD082S1S	MHMD 750W Absolute encoder	80
MHMD082S1T	MHMD 750W Absolute encoder	80
MHMD082S1U	MHMD 750W Absolute encoder	80
MHMD082S1V	MHMD 750W Absolute encoder	80

MHME (High inertia)

Part No.	Title	Page
MHME102G1C	MHME 1.0kW Incremental encoder	60
MHME102G1D	MHME 1.0kW Incremental encoder	60
MHME102G1G	MHME 1.0kW Incremental encoder	60
MHME102G1H	MHME 1.0kW Incremental encoder	60
MHME102S1C	MHME 1.0kW Absolute encoder	60
MHME102S1D	MHME 1.0kW Absolute encoder	60
MHME102S1G	MHME 1.0kW Absolute encoder	60
MHME102S1H	MHME 1.0kW Absolute encoder	60
MHME104G1C	MHME 1.0kW Incremental encoder	98
MHME104G1D	MHME 1.0kW Incremental encoder	98
MHME104G1G	MHME 1.0kW Incremental encoder	98
MHME104G1H	MHME 1.0kW Incremental encoder	98
MHME104S1C	MHME 1.0kW Absolute encoder	98
MHME104S1D	MHME 1.0kW Absolute encoder	98
MHME104S1G	MHME 1.0kW Absolute encoder	98
MHME104S1H	MHME 1.0kW Absolute encoder	98
MHME152G1C	MHME 1.5kW Incremental encoder	61
MHME152G1D	MHME 1.5kW Incremental encoder	61
MHME152G1G	MHME 1.5kW Incremental encoder	61
MHME152G1H	MHME 1.5kW Incremental encoder	61
MHME152S1C	MHME 1.5kW Absolute encoder	61
MHME152S1D	MHME 1.5kW Absolute encoder	61
MHME152S1G	MHME 1.5kW Absolute encoder	61
MHME152S1H	MHME 1.5kW Absolute encoder	61
MHME154G1C	MHME 1.5kW Incremental encoder	99
MHME154G1D	MHME 1.5kW Incremental encoder	99
MHME154G1G	MHME 1.5kW Incremental encoder	99
MHME154G1H	MHME 1.5kW Incremental encoder	99
MHME154S1C	MHME 1.5kW Absolute encoder	99
MHME154S1D	MHME 1.5kW Absolute encoder	99
MHME154S1G	MHME 1.5kW Absolute encoder	99
MHME154S1H	MHME 1.5kW Absolute encoder	99
MHME202G1C	MHME 2.0kW Incremental encoder	62
MHME202G1D	MHME 2.0kW Incremental encoder	62
MHME202G1G	MHME 2.0kW Incremental encoder	62
MHME202G1H	MHME 2.0kW Incremental encoder	62
MHME202S1C	MHME 2.0kW Absolute encoder	62
MHME202S1D	MHME 2.0kW Absolute encoder	62
MHME202S1G	MHME 2.0kW Absolute encoder	62
MHME202S1H	MHME 2.0kW Absolute encoder	62
MHME204G1C	MHME 2.0kW Incremental encoder	100
MHME204G1D	MHME 2.0kW Incremental encoder	100
MHME204G1G	MHME 2.0kW Incremental encoder	100
MHME204G1H	MHME 2.0kW Incremental encoder	100
MHME204S1C	MHME 2.0kW Absolute encoder	100
MHME204S1D	MHME 2.0kW Absolute encoder	100
MHME204S1G	MHME 2.0kW Absolute encoder	100
MHME204S1H	MHME 2.0kW Absolute encoder	100
MHME302G1C	MHME 3.0kW Incremental encoder	63
MHME302G1D	MHME 3.0kW Incremental encoder	63
MHME302G1G	MHME 3.0kW Incremental encoder	63

MHME (High inertia)

Part No.	Title	Page
MHME302G1H	MHME 3.0kW Incremental encoder	63
MHME302S1C	MHME 3.0kW Absolute encoder	63
MHME302S1D	MHME 3.0kW Absolute encoder	63
MHME302S1G	MHME 3.0kW Absolute encoder	63
MHME302S1H	MHME 3.0kW Absolute encoder	63
MHME304G1C	MHME 3.0kW Incremental encoder	101
MHME304G1D	MHME 3.0kW Incremental encoder	101
MHME304G1G	MHME 3.0kW Incremental encoder	101
MHME304G1H	MHME 3.0kW Incremental encoder	101
MHME304S1C	MHME 3.0kW Absolute encoder	101
MHME304S1D	MHME 3.0kW Absolute encoder	101
MHME304S1G	MHME 3.0kW Absolute encoder	101
MHME304S1H	MHME 3.0kW Absolute encoder	101
MHME402G1C	MHME 4.0kW Incremental encoder	64
MHME402G1D	MHME 4.0kW Incremental encoder	64
MHME402G1G	MHME 4.0kW Incremental encoder	64
MHME402G1H	MHME 4.0kW Incremental encoder	64
MHME402S1C	MHME 4.0kW Absolute encoder	64
MHME402S1D	MHME 4.0kW Absolute encoder	64
MHME402S1G	MHME 4.0kW Absolute encoder	64
MHME402S1H	MHME 4.0kW Absolute encoder	64
MHME404G1C	MHME 4.0kW Incremental encoder	102
MHME404G1D	MHME 4.0kW Incremental encoder	102
MHME404G1G	MHME 4.0kW Incremental encoder	102
MHME404G1H	MHME 4.0kW Incremental encoder	102
MHME404S1C	MHME 4.0kW Absolute encoder	102
MHME404S1D	MHME 4.0kW Absolute encoder	102
MHME404S1G	MHME 4.0kW Absolute encoder	102
MHME404S1H	MHME 4.0kW Absolute encoder	102
MHME502G1C	MHME 5.0kW Incremental encoder	65
MHME502G1D	MHME 5.0kW Incremental encoder	65
MHME502G1G	MHME 5.0kW Incremental encoder	65
MHME502G1H	MHME 5.0kW Incremental encoder	65
MHME502S1C	MHME 5.0kW Absolute encoder	65
MHME502S1D	MHME 5.0kW Absolute encoder	65
MHME502S1G	MHME 5.0kW Absolute encoder	65
MHME502S1H	MHME 5.0kW Absolute encoder	65
MHME504G1C	MHME 5.0kW Incremental encoder	103
MHME504G1D	MHME 5.0kW Incremental encoder	103
MHME504G1G	MHME 5.0kW Incremental encoder	103
MHME504G1H	MHME 5.0kW Incremental encoder	103
MHME504S1C	MHME 5.0kW Absolute encoder	103
MHME504S1D	MHME 5.0kW Absolute encoder	103
MHME504S1G	MHME 5.0kW Absolute encoder	103
MHME504S1H	MHME 5.0kW Absolute encoder	103

MSMD (Low inertia)

Part No.	Title	Page
MSMD011G1A	MSMD 100W Incremental encoder	68
MSMD011G1B	MSMD 100W Incremental encoder	68
MSMD011G1C	MSMD 100W Incremental encoder	68
MSMD011G1D	MSMD 100W Incremental encoder	68
MSMD011G1S	MSMD 100W Incremental encoder	68
MSMD011G1T	MSMD 100W Incremental encoder	68
MSMD011G1U	MSMD 100W Incremental encoder	68
MSMD011G1V	MSMD 100W Incremental encoder	68
MSMD011S1A	MSMD 100W Absolute encoder	68
MSMD011S1B	MSMD 100W Absolute encoder	68
MSMD011S1C	MSMD 100W Absolute encoder	68
MSMD011S1D	MSMD 100W Absolute encoder	68
MSMD011S1S	MSMD 100W Absolute encoder	68
MSMD011S1T	MSMD 100W Absolute encoder	68
MSMD011S1U	MSMD 100W Absolute encoder	68
MSMD011S1V	MSMD 100W Absolute encoder	68
MSMD012G1A	MSMD 100W Incremental encoder	69
MSMD012G1B	MSMD 100W Incremental encoder	69
MSMD012G1C	MSMD 100W Incremental encoder	69

MSMD (Low inertia)

Part No.	Title	Page
MSMD012G1D	MSMD 100W Incremental encoder	69
MSMD012G1S	MSMD 100W Incremental encoder	69
MSMD012G1T	MSMD 100W Incremental encoder	69
MSMD012G1U	MSMD 100W Incremental encoder	69
MSMD012G1V	MSMD 100W Incremental encoder	69
MSMD012S1A	MSMD 100W Absolute encoder	69
MSMD012S1B	MSMD 100W Absolute encoder	69
MSMD012S1C	MSMD 100W Absolute encoder	69
MSMD012S1D	MSMD 100W Absolute encoder	69
MSMD012S1S	MSMD 100W Absolute encoder	69
MSMD012S1T	MSMD 100W Absolute encoder	69
MSMD012S1U	MSMD 100W Absolute encoder	69
MSMD012S1V	MSMD 100W Absolute encoder	69
MSMD021G1A	MSMD 200W Incremental encoder	70
MSMD021G1B	MSMD 200W Incremental encoder	70
MSMD021G1C	MSMD 200W Incremental encoder	70
MSMD021G1D	MSMD 200W Incremental encoder	70
MSMD021G1S	MSMD 200W Incremental encoder	70
MSMD021G1T	MSMD 200W Incremental encoder	70
MSMD021G1U	MSMD 200W Incremental encoder	70
MSMD021G1V	MSMD 200W Incremental encoder	70
MSMD021S1A	MSMD 200W Absolute encoder	70
MSMD021S1B	MSMD 200W Absolute encoder	70
MSMD021S1C	MSMD 200W Absolute encoder	70
MSMD021S1D	MSMD 200W Absolute encoder	70
MSMD021S1S	MSMD 200W Absolute encoder	70
MSMD021S1T	MSMD 200W Absolute encoder	70
MSMD021S1U	MSMD 200W Absolute encoder	70
MSMD021S1V	MSMD 200W Absolute encoder	70
MSMD022G1A	MSMD 200W Incremental encoder	71
MSMD022G1B	MSMD 200W Incremental encoder	71
MSMD022G1C	MSMD 200W Incremental encoder	71
MSMD022G1D	MSMD 200W Incremental encoder	71
MSMD022G1S	MSMD 200W Incremental encoder	71
MSMD022G1T	MSMD 200W Incremental encoder	71
MSMD022G1U	MSMD 200W Incremental encoder	71
MSMD022G1V	MSMD 200W Incremental encoder	71
MSMD022S1A	MSMD 200W Absolute encoder	71
MSMD022S1B	MSMD 200W Absolute encoder	71
MSMD022S1C	MSMD 200W Absolute encoder	71
MSMD022S1D	MSMD 200W Absolute encoder	71
MSMD022S1S	MSMD 200W Absolute encoder	71
MSMD022S1T	MSMD 200W Absolute encoder	71
MSMD022S1U	MSMD 200W Absolute encoder	71
MSMD022S1V	MSMD 200W Absolute encoder	71
MSMD041G1A	MSMD 400W Incremental encoder	72
MSMD041G1B	MSMD 400W Incremental encoder	72
MSMD041G1C	MSMD 400W Incremental encoder	72
MSMD041G1D	MSMD 400W Incremental encoder	72
MSMD041G1S	MSMD 400W Incremental encoder	72
MSMD041G1T	MSMD 400W Incremental encoder	72
MSMD041G1U	MSMD 400W Incremental encoder	72
MSMD041G1V	MSMD 400W Incremental encoder	72
MSMD041S1A	MSMD 400W Absolute encoder	72
MSMD041S1B	MSMD 400W Absolute encoder	72
MSMD041S1C	MSMD 400W Absolute encoder	72
MSMD041S1D	MSMD 400W Absolute encoder	72
MSMD041S1S	MSMD 400W Absolute encoder	72
MSMD041S1T	MSMD 400W Absolute encoder	72
MSMD041S1U	MSMD 400W Absolute encoder	72
MSMD041S1V	MSMD 400W Absolute encoder	72
MSMD042G1A	MSMD 400W Incremental encoder	73
MSMD042G1B	MSMD 400W Incremental encoder	73
MSMD042G1C	MSMD 400W Incremental encoder	73
MSMD042G1D	MSMD 400W Incremental encoder	73
MSMD042G1S	MSMD 400W Incremental encoder	73
MSMD042G1T	MSMD 400W Incremental encoder	73

MSMD (Low inertia)

Part No.	Title	Page
MSMD042G1U	MSMD 400W Incremental encoder	73
MSMD042G1V	MSMD 400W Incremental encoder	73
MSMD042S1A	MSMD 400W Absolute encoder	73
MSMD042S1B	MSMD 400W Absolute encoder	73
MSMD042S1C	MSMD 400W Absolute encoder	73
MSMD042S1D	MSMD 400W Absolute encoder	73
MSMD042S1S	MSMD 400W Absolute encoder	73
MSMD042S1T	MSMD 400W Absolute encoder	73
MSMD042S1U	MSMD 400W Absolute encoder	73
MSMD042S1V	MSMD 400W Absolute encoder	73
MSMD082G1A	MSMD 750W Incremental encoder	74
MSMD082G1B	MSMD 750W Incremental encoder	74
MSMD082G1C	MSMD 750W Incremental encoder	74
MSMD082G1D	MSMD 750W Incremental encoder	74
MSMD082G1S	MSMD 750W Incremental encoder	74
MSMD082G1T	MSMD 750W Incremental encoder	74
MSMD082G1U	MSMD 750W Incremental encoder	74
MSMD082G1V	MSMD 750W Incremental encoder	74
MSMD082S1A	MSMD 750W Absolute encoder	74
MSMD082S1B	MSMD 750W Absolute encoder	74
MSMD082S1C	MSMD 750W Absolute encoder	74
MSMD082S1D	MSMD 750W Absolute encoder	74
MSMD082S1S	MSMD 750W Absolute encoder	74
MSMD082S1T	MSMD 750W Absolute encoder	74
MSMD082S1U	MSMD 750W Absolute encoder	74
MSMD082S1V	MSMD 750W Absolute encoder	74
MSMD5AZG1A	MSMD 50W Incremental encoder	66,67
MSMD5AZG1B	MSMD 50W Incremental encoder	66,67
MSMD5AZG1C	MSMD 50W Incremental encoder	66,67
MSMD5AZG1D	MSMD 50W Incremental encoder	66,67
MSMD5AZG1S	MSMD 50W Incremental encoder	66,67
MSMD5AZG1T	MSMD 50W Incremental encoder	66,67
MSMD5AZG1U	MSMD 50W Incremental encoder	66,67
MSMD5AZG1V	MSMD 50W Incremental encoder	66,67
MSMD5AZS1A	MSMD 50W Absolute encoder	66,67
MSMD5AZS1B	MSMD 50W Absolute encoder	66,67
MSMD5AZS1C	MSMD 50W Absolute encoder	66,67
MSMD5AZS1D	MSMD 50W Absolute encoder	66,67
MSMD5AZS1S	MSMD 50W Absolute encoder	66,67
MSMD5AZS1T	MSMD 50W Absolute encoder	66,67
MSMD5AZS1U	MSMD 50W Absolute encoder	66,67
MSMD5AZS1V	MSMD 50W Absolute encoder	66,67

MSME (Low inertia)

Part No.	Title	Page
MSME011G1A	MSME 100W Incremental encoder	38
MSME011G1B	MSME 100W Incremental encoder	38
MSME011G1C	MSME 100W Incremental encoder	38
MSME011G1D	MSME 100W Incremental encoder	38
MSME011G1S	MSME 100W Incremental encoder	38
MSME011G1T	MSME 100W Incremental encoder	38
MSME011G1U	MSME 100W Incremental encoder	38
MSME011G1V	MSME 100W Incremental encoder	38
MSME011S1A	MSME 100W Absolute encoder	38
MSME011S1B	MSME 100W Absolute encoder	38
MSME011S1C	MSME 100W Absolute encoder	38
MSME011S1D	MSME 100W Absolute encoder	38
MSME011S1S	MSME 100W Absolute encoder	38
MSME011S1T	MSME 100W Absolute encoder	38
MSME011S1U	MSME 100W Absolute encoder	38
MSME011S1V	MSME 100W Absolute encoder	38
MSME012G1A	MSME 100W Incremental encoder	39
MSME012G1B	MSME 100W Incremental encoder	39
MSME012G1C	MSME 100W Incremental encoder	39
MSME012G1D	MSME 100W Incremental encoder	39
MSME012G1S	MSME 100W Incremental encoder	39
MSME012G1T	MSME 100W Incremental encoder	39

Index (Alphabetical order)

MSME (Low inertia)		
Part No.	Title	Page
MSME012G1U	MSME 100W Incremental encoder	39
MSME012G1V	MSME 100W Incremental encoder	39
MSME012S1A	MSME 100W Absolute encoder	39
MSME012S1B	MSME 100W Absolute encoder	39
MSME012S1C	MSME 100W Absolute encoder	39
MSME012S1D	MSME 100W Absolute encoder	39
MSME012S1S	MSME 100W Absolute encoder	39
MSME012S1T	MSME 100W Absolute encoder	39
MSME012S1U	MSME 100W Absolute encoder	39
MSME012S1V	MSME 100W Absolute encoder	39
MSME021G1A	MSME 200W Incremental encoder	40
MSME021G1B	MSME 200W Incremental encoder	40
MSME021G1C	MSME 200W Incremental encoder	40
MSME021G1D	MSME 200W Incremental encoder	40
MSME021G1S	MSME 200W Incremental encoder	40
MSME021G1T	MSME 200W Incremental encoder	40
MSME021G1U	MSME 200W Incremental encoder	40
MSME021G1V	MSME 200W Incremental encoder	40
MSME021S1A	MSME 200W Absolute encoder	40
MSME021S1B	MSME 200W Absolute encoder	40
MSME021S1C	MSME 200W Absolute encoder	40
MSME021S1D	MSME 200W Absolute encoder	40
MSME021S1S	MSME 200W Absolute encoder	40
MSME021S1T	MSME 200W Absolute encoder	40
MSME021S1U	MSME 200W Absolute encoder	40
MSME021S1V	MSME 200W Absolute encoder	40
MSME022G1A	MSME 200W Incremental encoder	41
MSME022G1B	MSME 200W Incremental encoder	41
MSME022G1C	MSME 200W Incremental encoder	41
MSME022G1D	MSME 200W Incremental encoder	41
MSME022G1S	MSME 200W Incremental encoder	41
MSME022G1T	MSME 200W Incremental encoder	41
MSME022G1U	MSME 200W Incremental encoder	41
MSME022G1V	MSME 200W Incremental encoder	41
MSME022S1A	MSME 200W Absolute encoder	41
MSME022S1B	MSME 200W Absolute encoder	41
MSME022S1C	MSME 200W Absolute encoder	41
MSME022S1D	MSME 200W Absolute encoder	41
MSME022S1S	MSME 200W Absolute encoder	41
MSME022S1T	MSME 200W Absolute encoder	41
MSME022S1U	MSME 200W Absolute encoder	41
MSME022S1V	MSME 200W Absolute encoder	41
MSME041G1A	MSME 400W Incremental encoder	42
MSME041G1B	MSME 400W Incremental encoder	42
MSME041G1C	MSME 400W Incremental encoder	42
MSME041G1D	MSME 400W Incremental encoder	42
MSME041G1S	MSME 400W Incremental encoder	42
MSME041G1T	MSME 400W Incremental encoder	42
MSME041G1U	MSME 400W Incremental encoder	42
MSME041G1V	MSME 400W Incremental encoder	42
MSME041S1A	MSME 400W Absolute encoder	42
MSME041S1B	MSME 400W Absolute encoder	42
MSME041S1C	MSME 400W Absolute encoder	42
MSME041S1D	MSME 400W Absolute encoder	42
MSME041S1S	MSME 400W Absolute encoder	42
MSME041S1T	MSME 400W Absolute encoder	42
MSME041S1U	MSME 400W Absolute encoder	42
MSME041S1V	MSME 400W Absolute encoder	42
MSME042G1A	MSME 400W Incremental encoder	43
MSME042G1B	MSME 400W Incremental encoder	43
MSME042G1C	MSME 400W Incremental encoder	43
MSME042G1D	MSME 400W Incremental encoder	43
MSME042G1S	MSME 400W Incremental encoder	43
MSME042G1T	MSME 400W Incremental encoder	43
MSME042G1U	MSME 400W Incremental encoder	43
MSME042G1V	MSME 400W Incremental encoder	43
MSME042S1A	MSME 400W Absolute encoder	43

MSME (Low inertia)		
Part No.	Title	Page
MSME042S1B	MSME 400W Absolute encoder	43
MSME042S1C	MSME 400W Absolute encoder	43
MSME042S1D	MSME 400W Absolute encoder	43
MSME042S1S	MSME 400W Absolute encoder	43
MSME042S1T	MSME 400W Absolute encoder	43
MSME042S1U	MSME 400W Absolute encoder	43
MSME042S1V	MSME 400W Absolute encoder	43
MSME082G1A	MSME 750W Incremental encoder	44
MSME082G1B	MSME 750W Incremental encoder	44
MSME082G1C	MSME 750W Incremental encoder	44
MSME082G1D	MSME 750W Incremental encoder	44
MSME082G1S	MSME 750W Incremental encoder	44
MSME082G1T	MSME 750W Incremental encoder	44
MSME082G1U	MSME 750W Incremental encoder	44
MSME082G1V	MSME 750W Incremental encoder	44
MSME082S1A	MSME 750W Absolute encoder	44
MSME082S1B	MSME 750W Absolute encoder	44
MSME082S1C	MSME 750W Absolute encoder	44
MSME082S1D	MSME 750W Absolute encoder	44
MSME082S1S	MSME 750W Absolute encoder	44
MSME082S1T	MSME 750W Absolute encoder	44
MSME082S1U	MSME 750W Absolute encoder	44
MSME082S1V	MSME 750W Absolute encoder	44
MSME102G1C	MSME 1.0kW Incremental encoder	45
MSME102G1D	MSME 1.0kW Incremental encoder	45
MSME102G1G	MSME 1.0kW Incremental encoder	45
MSME102G1H	MSME 1.0kW Incremental encoder	45
MSME102S1C	MSME 1.0kW Absolute encoder	45
MSME102S1D	MSME 1.0kW Absolute encoder	45
MSME102S1G	MSME 1.0kW Absolute encoder	45
MSME102S1H	MSME 1.0kW Absolute encoder	45
MSME104G1C	MSME 1.0kW Incremental encoder	82
MSME104G1D	MSME 1.0kW Incremental encoder	82
MSME104G1G	MSME 1.0kW Incremental encoder	82
MSME104G1H	MSME 1.0kW Incremental encoder	82
MSME104S1C	MSME 1.0kW Absolute encoder	82
MSME104S1D	MSME 1.0kW Absolute encoder	82
MSME104S1G	MSME 1.0kW Absolute encoder	82
MSME104S1H	MSME 1.0kW Absolute encoder	82
MSME152G1C	MSME 1.5kW Incremental encoder	46
MSME152G1D	MSME 1.5kW Incremental encoder	46
MSME152G1G	MSME 1.5kW Incremental encoder	46
MSME152G1H	MSME 1.5kW Incremental encoder	46
MSME152S1C	MSME 1.5kW Absolute encoder	46
MSME152S1D	MSME 1.5kW Absolute encoder	46
MSME152S1G	MSME 1.5kW Absolute encoder	46
MSME152S1H	MSME 1.5kW Absolute encoder	46
MSME154G1C	MSME 1.5kW Incremental encoder	83
MSME154G1D	MSME 1.5kW Incremental encoder	83
MSME154G1G	MSME 1.5kW Incremental encoder	83
MSME154G1H	MSME 1.5kW Incremental encoder	83
MSME154S1C	MSME 1.5kW Absolute encoder	83
MSME154S1D	MSME 1.5kW Absolute encoder	83
MSME154S1G	MSME 1.5kW Absolute encoder	83
MSME154S1H	MSME 1.5kW Absolute encoder	83
MSME202G1C	MSME 2.0kW Incremental encoder	47
MSME202G1D	MSME 2.0kW Incremental encoder	47
MSME202G1G	MSME 2.0kW Incremental encoder	47
MSME202G1H	MSME 2.0kW Incremental encoder	47
MSME202S1C	MSME 2.0kW Absolute encoder	47
MSME202S1D	MSME 2.0kW Absolute encoder	47
MSME202S1G	MSME 2.0kW Absolute encoder	47
MSME202S1H	MSME 2.0kW Absolute encoder	47
MSME204G1C	MSME 2.0kW Incremental encoder	84
MSME204G1D	MSME 2.0kW Incremental encoder	84
MSME204G1G	MSME 2.0kW Incremental encoder	84
MSME204G1H	MSME 2.0kW Incremental encoder	84

MSME (Low inertia)		
Part No.	Title	Page
MSME204S1C	MSME 2.0kW Absolute encoder	84
MSME204S1D	MSME 2.0kW Absolute encoder	84
MSME204S1G	MSME 2.0kW Absolute encoder	84
MSME204S1H	MSME 2.0kW Absolute encoder	84
MSME302G1C	MSME 3.0kW Incremental encoder	48
MSME302G1D	MSME 3.0kW Incremental encoder	48
MSME302G1G	MSME 3.0kW Incremental encoder	48
MSME302G1H	MSME 3.0kW Incremental encoder	48
MSME302S1C	MSME 3.0kW Absolute encoder	48
MSME302S1D	MSME 3.0kW Absolute encoder	48
MSME302S1G	MSME 3.0kW Absolute encoder	48
MSME302S1H	MSME 3.0kW Absolute encoder	48
MSME304G1C	MSME 3.0kW Incremental encoder	85
MSME304G1D	MSME 3.0kW Incremental encoder	85
MSME304G1G	MSME 3.0kW Incremental encoder	85
MSME304G1H	MSME 3.0kW Incremental encoder	85
MSME304S1C	MSME 3.0kW Absolute encoder	85
MSME304S1D	MSME 3.0kW Absolute encoder	85
MSME304S1G	MSME 3.0kW Absolute encoder	85
MSME304S1H	MSME 3.0kW Absolute encoder	85
MSME402G1C	MSME 4.0kW Incremental encoder	49
MSME402G1D	MSME 4.0kW Incremental encoder	49
MSME402G1G	MSME 4.0kW Incremental encoder	49
MSME402G1H	MSME 4.0kW Incremental encoder	49
MSME402S1C	MSME 4.0kW Absolute encoder	49
MSME402S1D	MSME 4.0kW Absolute encoder	49
MSME402S1G	MSME 4.0kW Absolute encoder	49
MSME402S1H	MSME 4.0kW Absolute encoder	49
MSME404G1C	MSME 4.0kW Incremental encoder	86
MSME404G1D	MSME 4.0kW Incremental encoder	86
MSME404G1G	MSME 4.0kW Incremental encoder	86
MSME404G1H	MSME 4.0kW Incremental encoder	86
MSME404S1C	MSME 4.0kW Absolute encoder	86
MSME404S1D	MSME 4.0kW Absolute encoder	86
MSME404S1G	MSME 4.0kW Absolute encoder	86
MSME404S1H	MSME 4.0kW Absolute encoder	86
MSME502G1C	MSME 5.0kW Incremental encoder	50
MSME502G1D	MSME 5.0kW Incremental encoder	50
MSME502G1G	MSME 5.0kW Incremental encoder	50
MSME502G1H	MSME 5.0kW Incremental encoder	50
MSME502S1C	MSME 5.0kW Absolute encoder	50
MSME502S1D	MSME 5.0kW Absolute encoder	50
MSME502S1G	MSME 5.0kW Absolute encoder	50
MSME502S1H	MSME 5.0kW Absolute encoder	50
MSME504G1C	MSME 5.0kW Incremental encoder	87
MSME504G1D	MSME 5.0kW Incremental encoder	87
MSME504G1G	MSME 5.0kW Incremental encoder	87
MSME504G1H	MSME 5.0kW Incremental encoder	87
MSME504S1C	MSME 5.0kW Absolute encoder	87
MSME504S1D	MSME 5.0kW Absolute encoder	87
MSME504S1G	MSME 5.0kW Absolute encoder	87
MSME504S1H	MSME 5.0kW Absolute encoder	87
MSME5AZG1A	MSME 50W Incremental encoder	36,37
MSME5AZG1B	MSME 50W Incremental encoder	36,37
MSME5AZG1C	MSME 50W Incremental encoder	36,37
MSME5AZG1D	MSME 50W Incremental encoder	36,37
MSME5AZG1S	MSME 50W Incremental encoder	36,37
MSME5AZG1T	MSME 50W Incremental encoder	36,37
MSME5AZG1U	MSME 50W Incremental encoder	36,37
MSME5AZG1V	MSME 50W Incremental encoder	36,37
MSME5AZS1A	MSME 50W Absolute encoder	36,37
MSME5AZS1B	MSME 50W Absolute encoder	36,37
MSME5AZS1C	MSME 50W Absolute encoder	36,37
MSME5AZS1D	MSME 50W Absolute encoder	36,37
MSME5AZS1S	MSME 50W Absolute encoder	36,37
MSME5AZS1T	MSME 50W Absolute encoder	36,37
MSME5AZS1U	MSME 50W Absolute encoder	36,37

MSME (Low inertia)		
Part No.	Title	Page
MSME5AZS1V	MSME 50W Absolute encoder	36,37

Sales Office

[Panasonic Sales Office of Motors]

(Sep. 1. 2009)

Country	Company Name	City	Address	TEL / FAX
U.S.A.	Panasonic Industrial Company(PIC)	New Jersey	Two Panasonic Way Secaucus, New Jersey 07094 U.S.A.	TEL 1-201-348-5356 FAX 1-201-392-4315
		California	2033 Gateway Place, Suite 200 San Jose, CA 95110, U.S.A.	TEL 1-408-487-9536 FAX 1-408-436-8037
Spain	Panasonic Electric Works Espana S.A.	Madrid	Barajas Park, San Severo 20, 28042 Madrid,Spain	TEL 34-91-329-3875 FAX 34-91-329-2976
Germany	Panasonic Electric Works Europe AG	Munich	Rudolf-Diesel-Ring 2, 83607 Holzkirchen, Germany	TEL 49-8024-648-0 FAX 49-8024-648-555
Italy	Panasonic Electric Works Italia srl	Verona	Via del Commercio 3-5 (Z.I. Ferlina), 37012 Bussolengo (VR), Italy	TEL 39-045-6752711 FAX 39-045-6700444
United Kingdom	Panasonic Electric Works UK Ltd.	Milton Keynes	Sunrise Parkway,Linford Wood, Milton Keynes, MK14 6 LF, the United Kingdom	TEL 44-1908-231-555 FAX 44-1908-231-599
Taiwan	Panasonic Industrial Sales (Taiwan) Co., Ltd.(PIST)	Taipei	12F, No.9, SongGao Rd., Taipei 110, Taiwan, R.O.C.	TEL 886-2-2757-1878 FAX 886-2-2757-1907
Singapore	Panasonic Industrial Singapore(PICS)	Singapore	300 Beach Road #16-01 The Concourse Singapore 199555	TEL 65-6390-3727 FAX 65-6390-3834
China	Panasonic Industrial (China) Co.,Ltd.(PICN)	Shanghai	Floor 7, China Insurance Building, 166 East Road LuJiaZui PuDong New District, Shanghai, China	TEL 86-21-3855-2442 FAX 86-21-3855-2375
	Panasonic Shun Hing Industrial Sales (Hong kong) Co., Ltd.	Hong kong	Level 33, Office Tower, Langham Place, 8 Argyle Street, Mongkok, Kin.,Hong Kong	TEL 852-2529-7322 FAX 852-2598-9743
	Panasonic Shun Hing Industrial Sales (Shenzhen) Co., Ltd.	Shenzhen	6th Floor, Excellence Times Square, #4068 Yitian Road, Futian District, Shenzhen, China	TEL 86-755-8255-8551 FAX 86-755-8255-8668
India	Panasonic Industrial Asia Pte Ltd. (PIAI)	New Delhi	510, E-Block, International Trade Tower, Nehru Place, New Delhi	TEL 91-11-26292870 FAX 91-11-26292878

[Distributor]

Country	Company Name	City	Address	TEL / FAX
Korea	YOUNG IL Electric Co.,Ltd.	Seoul	3Fr-, Young-il, 982-4, Shi-heung 3 Dong, Keum-cheon Ku, Seoul, Korea	TEL 82-2-805-2471 FAX 82-2-805-2475
	Soonhan Engineering Co.,Ltd.	Sungnam	333-11, Sangdaewon-Dong, Jungwon-Ku, Sungnam City, Kyungki-Do, 462-806, Korea	TEL 82-31-737-1660 FAX 82-31-732-9188
	Zeus Co.,Ltd.	Osan	163-1, Busan-Dong, Osan-City, Kyunggi-Do, 447-050, Korea	TEL 82-31-377-9500 FAX 82-31-378-8660

Cautions for Proper Use

- This product is intended to be used with a general industrial product, but not designed or manufactured to be used in a machine or system that may cause personal death when it is failed.
- Installation, wiring, operation, maintenance, etc., of the equipment should be done by qualified and experienced personnel.
- Apply adequate tightening torque to the product mounting screw by taking into consideration strength of the screw and the characteristics of material to which the product is installed. Overtightening can damage the screw and/or material; undertightening can result in loosening.
  Example) Steel screw (M5) into steel section: 2.7 to 3.3 N·m.
- Install a safety equipments or apparatus in your application, when a serious accident or loss of property is expected due to the failure of this product.
- Consult us if the application of this product is under such special conditions and environments as nuclear energy control, aerospace, transportation, medical equipment, various safety equipments or equipments which require a lesser air contamination.
- We have been making the best effort to ensure the highest quality of the products, however, application of exceptionally larger external noise disturbance and static electricity, or failure in input power, wiring and components may result in unexpected action. It is highly recommended that you make a fail-safe design and secure the safety in the operative range.
- If the motor shaft is not electrically grounded, it may cause an electrolytic corrosion to the bearing, depending on the condition of the machine and its mounting environment, and may result in the bearing noise. Checking and verification by customer is required.
- Failure of this product depending on its content, may generate smoke of about one cigarette. Take this into consideration when the application of the machine is clean room related.
- Please be careful when using in an environment with high concentrations of sulfur or sulfric gases, as sulfuration can lead to disconnection from the chip resistor or a poor contact connection.
- Take care to avoid inputting a supply voltage which significantly exceeds the rated range to the power supply of this product. Failure to heed this caution may result in damage to the internal parts, causing smoking and/or a fire and other trouble.
- The user is responsible for matching between machine and components in terms of configuration, dimensions, life expectancy, characteristics, when installing the machine or changing specification of the machine. The user is also responsible for complying with applicable laws and regulations.
- Read and observe the instruction manual without fail for proper usage of the products.

Repair	Consult to the dealer from whom you have purchased this product for details of repair work. When the product is incorporated to the machine you have purchased, consult to the machine manufacturer or its dealer.
URL	Electric data of this product (Instruction Manual, CAD data) can be download from the following web site; <http://industrial.panasonic.com/ww/i_e/25000/motor_fa_e/motor_fa_e.html

Contact to :

Motor Company,
Panasonic Corporation

1-1 Morofuku 7-chome, Daito, Osaka 574-0044, Japan
Tel : +81-72-871-1212
Fax: +81-72-870-3151

ISO14001 Certificate division
CERTIFICATE OF APPROVAL ISO14001

ISO9001 Certificate division
CERTIFICATE OF APPROVAL ISO9001

The contents of this catalog apply to the products as of Sep. 1, 2009.

- Printed colors may be slightly different from the actual products.
- Specifications and design of the products are subject to change without notice for the product improvement.

<09.09Ⓜ>