Driver Specification Sheet

Peerless by TYMPHANY

Model No: PMT-20N12AL03-04
Product Line: Tymphany

Rev: 1
Last Update: 2017-04-21 12:39:42

Product Description

This 20 mm 4 ohm compact Premium Micro Transducer is designed for computer, television array, and similar applications. It features a neodymium-iron-boron magnet, a light aluminium cone, and a high-temperature polycarbonate frame. The PMT family`s transducers feature low resonant frequencies and a full range bandwidth.

Mechanical Drawing

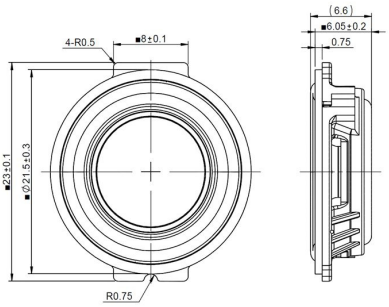

Specifications

DC Resistance	Revc	Ohms	3.62	5.0%	Energy Bandwidth Product	EBP	(1/Qes)*fs	
Minimum Impedance	Zmin	Ohms	4.46	7.5%	Moving Mass	Mms	g	0.1
Voice Coil Inductance	Le	mH	0.02		Suspension Compliance	Cms	um/N	1294
Resonant Frequency	Fs	Hz	398.7	15%	Effective Cone diameter	D	cm	1.66
Mechanical Q Factor	Qms		1.89		Effective Piston Area	Sd	cm^2	2.2
Electrical Q Factor	Qes	4.49			Effective Volume	Vas	L	0.01
Total Q Factor	Qts		1.33		Motor Force Factor	BL	Tm	0.5
Ratio Fs/Qts	F	Fs/Qts	300		Motor Efficiency Factor	ß	(T*M^2)/Ohms	0.1
Half Space Sensitivity @2.83V	db@2.83V/1M	dB	76.09	+/- 1.0db	Voice coil former Material	VCfm		KSV
Half Space Sensitivity @1W/1M	db@1W/1M	dB	73.5	+/- 1.0db	Voice coil inner diameter	VCd	mm	12
Gap Height	Gh	mm	0.8		Rated Noise Power	P	W	1
Maximum Linear Excursion	Xmax	mm	0.3		Test Spectrum Bandwidth	400-20K		
Ferrofluid Type	FF				Driver Size	Inch	20 mm	
Driver Mass	Kg	0						

Frequency and Impedance Response

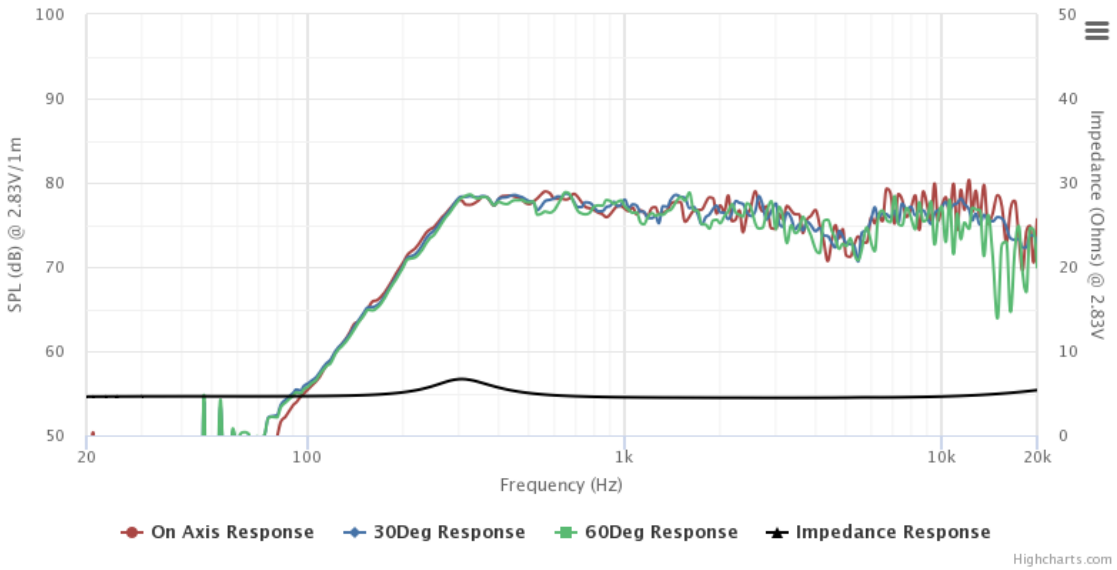

Tymphany HK LTD
Address : Room 1307-8 Dominion Centre, 43-59 Queens Rd East, Wanchai, Hong Kong
E-mail: sales@tymphany.com